TOWN OF
NORTH YARMOUTH
LAND USE ORDINANCE

Adopted: June 14, 2005
Amended: May 13, 2006
May 17, 2008
May 30, 2009
June 12, 2010
June 18, 2011
June 16, 2012
June 15, 2013
April 9, 2016
April 28, 2018
October 30, 2018
June 19, 2021
March 15, 2022
April 30, 2022
November 8, 2022
June 17, 2023
June 17, 2024
June 15, 2026

TABLE OF CONTENTS

I. GENERAL PROVISIONS....5
SECTION 1.1 TITLE....5
SECTION 1.2 AUTHORITY....5
SECTION 1.3 PURPOSE [amended 6/19/21]....5
SECTION 1.4 CONFLICT WITH OTHER ORDINANCES....6
SECTION 1.5 SEPARABILITY....6
SECTION 1.6 EFFECTIVE DATE OF THIS ORDINANCE AND REPEAL OF FORMERLY ADOPTED ORDINANCES AND REGULATIONS [Amended 5/17/08]....6
SECTION 1.7 AMENDMENTS TO THIS ORDINANCE....7
SECTION 1.8 CONTRACT ZONING [amended 6/19/21]....7

II. NON- ARTICLE CONFORMANCE....10
SECTION 2.1 INTENT [Amended 5/17/08]....10
SECTION 2.2 GENERAL....10
SECTION 2.3 NON-CONFORMING STRUCTURES [Amended 5/17/08]....10
SECTION 2.4 NON-CONFORMING USES [Amended 5/17/08]....12
SECTION 2.5 NON-CONFORMING LOTS [Amended 5/17/08]....13
SECTION 2.6 VESTED RIGHTS....14

III. ADMINISTRATION AND ENFORCEMENT....15
SECTION 3.1 CODE ENFORCEMENT OFFICER (CEO) [Amended 5/17/08]....15
SECTION 3.2 APPROVALS AND PERMITS REQUIRED [Amended 5/17/08, 6/19/21]....15
SECTION 3.3 BUILDING/LAND USE PERMITS [Amended 5/17/08; 6/19/21; 3/15/22; 6/17/24]....16
SECTION 3.4 EXPIRATION OF PERMITS [Amended 5/17/08]....19
SECTION 3.5 TRANSFER OF PERMITS....19
SECTION 3.6 CERTIFICATE OF OCCUPANCY....19
SECTION 3.7 FEES [amended 6/19/21]....19
SECTION 3.8 PERFORMANCE GUARANTEES [AMENDED 6/17/24]....20
SECTION 3.9 CONFORMANCE WITH OTHER LAWS, REGULATIONS [amended 6/19/21]....21
SECTION 3.10 LEGAL ACTION AND VIOLATIONS [Amended 5/17/08; 6/19/21]....22

IV. SITE PLAN REVIEW AND CONDITIONAL USE PROCEDURES....23
SECTION 4.1 PURPOSE....23
SECTION 4.2 APPLICABILITY....23
SECTION 4.3 REVIEW AND APPROVAL AUTHORITY [amended 6/19/21; 6/17/24]....23
SECTION 4.4 PROCEDURES [amended 6/19/21; 4/30/22; 6/17/24]....24
SECTION 4.5 GROUNDWATER PROTECTION OVERLAY DISTRICT: ADDITIONAL SUBMISSION REQUIREMENTS....33
Section 4.6 royal river OVERLAY DISTRICT: ADDITIONAL SUBMISSION REQUIREMENTS....37
SECTION 4.7 CONDITIONAL USES....38

V. SUBDIVISION REVIEW PROCEDURES AND CRITERIA....40
SECTION 5.1 PURPOSES....40
SECTION 5.2 AUTHORITY AND ADMINISTRATION [AMENDed 6/17/24]....40
SECTION 5.3 PRE-APPLICATION MEETING, SKETCH PLAN AND SITE visit [amended 6/19/21; 6/17/24]....41
SECTION 5.4 SPECIAL SUBMISSION REQUIREMENTS....42
SECTION 5.5 MINOR SUBDIVISION [amended 6/19/21; 4/30/22; 6/17/24]....42
SECTION 5.6 PRELIMINARY PLAN FOR MAJOR SUBDIVISION [amended 6/19/21; 4/30/22; 6/17/24]....48
SECTION 5.7 FINAL PLAN FOR MAJOR SUBDIVISION [amended 6/19/21;4/30/22; 6/17/24]....54
SECTION 5.8 FINAL APPROVAL AND FILING FOR MINOR AND MAJOR SUBDIVISIONS [amended 6/19/21; 6/17/24]....57

SECTION 5.9 REVISIONS TO APPROVED PLANS FOR MINOR AND MAJOR SUBDIVISIONS [Revised 4/30/22; 6/17/24] 58
SECTION 5.10 INSPECTIONS AND ENFORCEMENT [amended 6/19/21] 58
SECTION 5.11 SUBDIVISION REVIEW CRITERIA [amended 6/17/24] 60

VI. VARIANCES AND APPEALS 64
SECTION 6.1 APPOINTMENT AND COMPOSITION [amended 6/19/21] 64
SECTION 6.2 POWERS AND DUTIES OF THE ZONING BOARD OF APPEALS (ZBA). [Amended 5/17/08] 64
SECTION 6.3 ADMINISTRATIVE APPEALS, VARIANCES AND MISCELLANEOUS APPEALS [Amended 6/12/10; 6/19/21, 11/08/22] 64

VII. ZONING DISTRICT REGULATIONS 69
SECTION 7.1 ESTABLISHMENT OF DISTRICTS 69
SECTION 7.2 ZONING MAP AND LOCATIONS OF DISTRICTS 69
SECTION 7.3 DISTRICT PURPOSES [Amended 5/17/08] 71
SECTION 7.4 DISTRICT LAND USE TABLE [amended 6/19/21] 73
TABLE 7-1 LAND USES BY DISTRICT KEY 74
SECTION 7.5 SPECIAL EXCEPTION FOR SINGLE FAMILY DWELLINGS AND ACCESSORY STRUCTURES IN THE RESOURCE PROTECTION DISTRICT [Amended 5/17/08; 6/17/24] 84
SECTION 7.6 SPACE AND DIMENSIONAL REQUIREMENTS [Amended 5/17/08; 6/19/21; 6/17/24] 85
TABLE 7.2 SPACE AND DIMENSIONAL REQUIREMENTS [AMENDED 6/19/21, 11/08/22; 6/17/24] 88

VIII. GENERAL REQUIREMENTS: APPLICABLE TO ALL LAND USES 93
SECTION 8.1 PURPOSE AND APPLICABILITY 93
SECTION 8.2 UTILIZATION OF THE SITE 93
SECTION 8.3 BACK LOTS AND STREET ACCESS REQUIREMENTS [Amended 6/19/21; 6/17/24] 93
SECTION 8.4 DESIGN AND CONSTRUCTION STANDARDS FOR ROADS AND DRIVEWAYS [AMENDED 6/19/21] 94
Table 8.2 102
SECTION 8.5 EROSION AND SEDIMENTATION CONTROL 105
SECTION 8.6 SEWAGE DISPOSAL 106
SECTION 8.7 SIGNS [Amended 5/17/08; 6/17/24] 106
SECTION 8.8 STORM WATER CONTROL 108
SECTION 8.9 WATER QUALITY [amended 6/17/24] 108
SECTION 8.10 WELLS 109
SECTION 8.11 ANIMAL HUSBANDRY 109
SECTION 8.12 FLOODPLAIN MANAGEMENT [amended 6/17/24] 109

IX. SPECIAL DISTRICT STANDARDS 111
SECTION 9.1 RESIDENTIAL SHORELAND DISTRICT AND RESOURCE PROTECTION DISTRICT PERFORMANCE STANDARDS [Amended 5/17/08;6/19/21] 111
SECTION 9.2 GROUNDWATER PROTECTION OVERLAY DISTRICT: BEST MANAGEMENT PRACTICES [amended 6/17/24] 123
SECTION 9.3 ROYAL RIVER CORRIDOR OVERLAY DISTRICT [amended 6/19/21] 129

X. PERFORMANCE AND DESIGN STANDARDS FOR SITE PLAN REVIEW ANDSUBDIVISION REVIEW 131
SECTION 10.1 APPLICABILITY 131
SECTION 10.2 GENERAL LAYOUT OF DEVELOPMENT [amended 6/19/21] 131
SECTION 10.3. BROOK, POND, VERNAL POOL AND WETLAND BUFFERS 132
SECTION 10.4 BUILDING STANDARDS [amended 6/19/21] 135
SECTION 10.5 COMMUNITY FACILITIES IMPACT ANALYSIS AND MITIGATION 223
SECTION 10.6 DRIVE THROUGH FACILITES [amended 6/19/21] 223
SECTION 10.7 EROSION AND SEDIMENTATION CONTROL 223

SECTION 10.8 EMISSIONS....224
SECTION 10.9 EXTERIOR LIGHTING....224
SECTION 10.10 FINANCIAL AND TECHNICAL CAPACITY....225
SECTION 10.11 FLOODPLAIN MANAGEMENT [amended 6/17/24]....225
SECTION 10.12 HAZARDOUS, SPECIAL, AND RADIOACTIVE MATERIALS [amended 6/17/24]....226
SECTION 10.13 HISTORIC AND ARCHAEOLOGICAL SITES....226
SECTION 10.14 LANDSCAPING, BUFFERS AND SCREENING....226
SECTION 10.15 NATURAL BEAUTY AND AESTHETICS IN THE FARM AND FOREST DISTRICT, RESIDENTIAL SHORELAND DISTRICT AND RESOURCE PROTECTION DISTRICT....227
SECTION 10.16 NOISE....228
SECTION 10.17 SEWAGE DISPOSAL [amended 4/30/22]....228
SECTION 10.18 SIGNS [amended 6/17/24]....229
SECTION 10.19 SOIL SUITABILITY....229
SECTION 10.20 SOLID WASTE DISPOSAL....229
SECTION 10.21 STORAGE OF MATERIALS....230
SECTION 10.22 STORM WATER CONTROL....230
SECTION 10.23 RECREATION AND OPEN SPACE LAND [amended 6/19/21; 4/30/22; 6/17/24]....231
SECTION 10.24 WATER SUPPLY [amended 6/17/24]....234
SECTION 10.25 WATER QUALITY [amended 6/19/21]....235
SECTION 10.26 PROTECTION OF SIGNIFICANT WILDLIFE HABITAT [AMENDED 6/19/21]....236
SECTION 10.27 PUBLIC ACCESS TO THE SHORELINE....237
SECTION 10.28 BACK LOTS AND ACCESS [amended 6/19/21; 6/17/24]....237
SECTION 10.29 ACCESS MANAGEMENT STANDARDS [amended 6/19/21]....237
SECTION 10.30 SUBDIVISION STREET CONNECTIVITY REQUIRED IN THE VILLAGE CENTER AND VILLAGE RESIDENTIAL DISTRICTS [amended 6/19/21]....240
SECTION 10.31 SUBDIVISION STREET LENGTH AND CONNECTION REQUIREMENTS IN THEFARM AND FOREST DISTRICT AND RESIDENTIAL SHORELAND DISTRICT [amended 6/19/21]....241
SECTION 10.32 PEDESTRIAN WAYS AND BICYCLE ACCESS, CIRCULATION AND FACILITIES [amended 6/19/21]....242
SECTION 10.33 INTERNAL VEHICULAR CIRCULATION [amended 6/19/21]....243
SECTION 10.34 OFF STREET PARKING [amended 6/19/21; 6/17/24]....243
SECTION 10.35 OFF STREET LOADING REQUIREMENTS....246

XI. STANDARDS FOR SPECIFIC ACTIVITIES....248
SECTION 11.1 ACCESSORY dwelling apartments [Amended 5/17/08; 6/17/24]....248
SECTION 11.2 AFFORDABLE HOUSING [amended 6/19/21; 6/17/24]....249
11.2.1 Village Center (VC) District Affordable Housing Density Bonus....249
11.2.2 – Affordable Housing Bonus for districts outside the Village Center....251
SECTION 11.3 CLUSTERED HOUSING DEVELOPMENT AND OPEN SPACE DEVELOPMENT [amended 6/19/21]....252
SECTION 11.4 HOME OCCUPATIONS....259
SECTION 11.5 MANUFACTURED HOUSING ON INDIVIDUAL LOTS....260
SECTION 11.6 MOBILE HOME PARKS [AMENDED 6/19/21]....260
SECTION 11.7 EXTRACTION OF EARTH MATERIALS (MINERAL EXTRACTION) [amended 6/19/21]....265
SECTION 11.8 WIRELESS COMMUNICATIONS FACILITIES [amended 6/19/21]....267
SECTION 11.9 [reserved]....272
sECTION 11.11 ADVANCED WASTEWATER TREATMENT SYSTEMS (WHERE REQUIRED)....272

XII. DEFINITIONS [AMENDED 6/19/21;4/30/22; 06/17/23; 6/17/24]....274

I. GENERAL PROVISIONS

SECTION 1.1 TITLE

This Ordinance shall be known as the "Town of North Yarmouth Land Use Ordinance", and may be referredto by said designation. No building or structure shall be erected, structurally altered, enlarged, repaired, moved, rebuilt, or used, and no land shall be used, except in conformity with the provisions of this Ordinance.

SECTION 1.2 AUTHORITY

This Ordinance is adopted pursuant to the enabling provisions of the Maine Constitution; the provisions of 30-A, M.R.S. Section 3001 (Home Rule); the State's Comprehensive Planning and Land Use RegulationAct, 30-A M.R.S. § 4301, et seq.; the Mandatory Shoreland Zoning Act, 38 M.R.S. Sections 435 et. seq.; and the Subdivision Law, 30-A, M.R.S. § 4401, et. seq.

SECTION 1.3 PURPOSE [AMENDED 6/19/21]

This Ordinance is adopted for the following purposes:

A. To implement the provisions of the town's duly adopted Comprehensive Plan, as amended from time to time.

B. To provide for the health, safety and general welfare of its inhabitants

C. To encourage orderly growth and development in appropriate areas of the community, while protectingrural character, and making efficient use of public services

D. To encourage the most appropriate use of land throughout the town

E. To promote traffic safety

F. To provide adequate light and air, and safety from fire and other elements

G. To promote coordinated development of unbuilt areas

H. To encourage the formation of community units

I. To provide an allotment of land area for new developments sufficient for all the requirements ofcommunity life

J. To conserve and protect natural resources, including wildlife habitat, scenic and cultural resources

K. To provide for adequate and cost-effective public services

L. To control building sites, placement of structures and land uses

M. To conserve natural beauty and open space

N. In shoreland areas:

    1. To further the maintenance of safe and healthful conditions

2. To prevent and control water pollution
3. To protect fish spawning grounds, aquatic life, bird and other wildlife habitat
4. To protect buildings and lands from flooding and accelerated erosion
5. To protect freshwater wetlands
6. To conserve shore cover, and visual as well as actual points of access to inland waters
7. To anticipate and respond to the impacts of development in shoreland areas

SECTION 1.4 CONFLICT WITH OTHER ORDINANCES

Whenever the requirements of this Ordinance are at variance with the requirements of any other lawfully adopted rules, regulations, ordinances, deed restrictions or covenants, the most restrictive, or that imposing the higher standards, shall govern.

SECTION 1.5 SEPARABILITY

In the event any section, subsection or any portion of this Ordinance shall be declared by any court of competent jurisdiction to be invalid for any reason, such section shall not be deemed to affect the validity of any other section, subsection or other portion of this Ordinance. To this end, the provisions of this Ordinance are hereby declared to be separable.

SECTION 1.6 EFFECTIVE DATE OF THIS ORDINANCE AND REPEAL OF FORMERLY ADOPTED ORDINANCES AND REGULATIONS [AMENDED 5/17/08]

A. **Effective Date of Ordinance and Ordinance Amendments:** This Ordinance became effective on itsdate of enactment, June 14, 2005. Notwithstanding Section 1.6.B below, any amendments to this Ordinance take effect upon enactment by the Town of North Yarmouth.

B. **Shoreland Zoning Provisions**[1]**:** The shoreland zoning provisions of this Ordinance shall be effectiveupon the date of adoption subject to Commissioner of the Department of Environmental Protection approval. A certified copy of the Ordinance, or Ordinance Amendment, attested and signed by the Town Clerk, shall be forwarded to the Commissioner of the Department of Environmental Protection for approval. If the Commissioner fails to act on the shoreland zoning provisions, or shoreland zoningamendment, of this Ordinance within 45 days of his/her receipt of the Ordinance, it shall beautomatically approved.

C. **Repeal and Replacement of Prior Ordinances and Regulations:** Adoption of this Ordinance repeals and replaces the previously adopted Zoning Ordinance, Shoreland Zoning Ordinance and theSubdivision Regulations for the town of North Yarmouth adopted by the Planning Board.

D. **Repeal of Municipal Timber Harvesting Regulation [Adopted 5/17/08]:** The municipal regulation of timber harvesting activities is repealed on the statutory date established under 38 M.R.S. Section 438-A(5), at which time the State of Maine Department of Conservation's Bureau of Forestry shall administer timber harvesting standards in the Residential Shoreland District and Resource Protection District. On the date established under 38 M.R.S. Section 438-A(5), the following provisions of this Ordinance are repealed:

[1] Shoreland zoning provisions include those provisions associated with the Resource Protection District and the Residential Shoreland District.

1. In Section VII. Table 7-1. Table of Land Uses, Column 1, “Forest management activities except fortimber harvesting” and “Timber harvesting”;

2. Section IX. Section 9-1.S. Timber Harvesting, in its entirety; and

3. Section XII. Definitions, the following definitions: “forest management activities” and “residual basalarea”.

SECTION 1.7 AMENDMENTS TO THIS ORDINANCE

A. **General:** This Ordinance may be amended by a majority vote of the registered voters in attendance at a regular town meeting or special town meeting called by the Municipal Officers. The Ordinance may also be amended at a regular town meeting upon a written petition of at least 10 percent of the town’s registered voters. In all cases a public hearing shall be held prior to the town meeting vote onthe proposed amendment.

B. **Shoreland Zoning Amendments[1]:** Copies of amendments relative to the shoreland zones, attestedand signed by the Town Clerk, shall be submitted to the Commissioner of the Department of Environmental Protection following adoption by the town and shall not be effective unless approved by the Commissioner. If the Commissioner fails to act on any amendment within 45 days of his/her receipt of the amendment, the amendment is automatically approved. Any application for a permit in the shoreland, submitted to the town within the 45-day period shall be governed by the terms of the amendment if the Commissioner approves such amendment.

SECTION 1.8 CONTRACT ZONING [AMENDED 6/19/21]

A. Authorization:
Pursuant to 30-A M.R.S. § 4352(8), contract zoning is hereby authorized for rezoning of property where, for reasons such as the unusual nature or unique location of the development proposed, the Select Board finds it necessary or appropriate to modify the zoning district regulations applicable to a parcel of land, which will allow reasonable uses of the land and activities which would not have been permitted by the existing zoning district regulations but which remain consistent with the Town of NorthYarmouth’s Comprehensive Plan and compatible with the existing and permitted uses within the existing zoning district classification. Nothing in this section shall authorize a rezoning, or an agreement to change or retain a zone, which is inconsistent with the Town’s Comprehensive Plan.

Considering a request for a contract zone agreement for a particular property or group of properties under this section, the Select Board may impose certain conditions and restrictions
on the use of the property where it finds:

a. that such conditions and restrictions are necessary to protect the public health, safety, and general welfare;

b. when the Select Boardseek to advance desired land use objectives consistent with the Comprehensive Plan;

c. where such uses provide a public purpose or benefit.

B. **Standards**:

1. Any zone change adopted pursuant to this section shall be subject to a contractual agreement executed by authorized representatives of both the property owner and the Town of North Yarmouth providing for the implementation and enforcement of the conditions and restrictions of the agreement.

2. The agreement shall only include conditions or restrictions which relate to the physical development or operation of the property.

3. Any zone change permitted under this section shall be consistent with the Comprehensive Plan of the Town and with the existing and permitted uses in the original zone.

4. The proposed contract zoning agreement shall clearly describe the extent of variation (if any) from the standards for the zone in which the parcel is located, and may include site plan drawings and all other pertinent information to support the contract.

C. **Conditions and Restrictions**:

Conditions and restrictions imposed by the Select Board under the authority of this section shall relate only to the physical development and operation of the property and mayinclude, but shall not be limited to, the following:

1. Limitation of the number and type of permitted uses of the property.

2. Restriction on the scale and density of development.

3. Specifications for the design and layout of the building(s), accessory buildings and other site improvements.

4. Contributions toward the provision of municipal services required by or a result of the development

5. The lot standards.

6. The hours of operation for the proposed use.

7. The creation or preservation of open space areas or buffer zones, protection of natural areas and historic features.

8. The dedication of property, undeveloped or improved, for public purposes, such as streets, sidewalks and trails, parks, utility systems, andconservation easements.

9. Schedules for commencement and completion of construction.

10. Provisions for enforcement and remedies for breach of any condition restrictions.

11. Performance guarantees securing completion and maintenance of improvements, and guarantees against defects.

D. **Notice Requirements and Procedures**:

1. The Select Board shall hear the request for a contract zoning proposal in a public meeting, and will decide whether to continue consideration of the proposal by referring thematter to the Planning Board for an advisory recommendation.

2. In accordance with 30-A M.R.S. §4352(8), the Planning Board shall hold a public hearing. Notice of this hearing shall be posted in the town office at least thirteen (13) days prior to the public hearing and shall be published in a newspaper of general circulation within the town at least two (2) times, the date of the first publication must be at least twelve (12) days prior to thehearing and the second notice at least seven (7) days prior to the hearing. Notice shall also be sent to the property owner and all abutters within a five-hundred foot (500 ft.) radius of the boundary lines of the property being considered for contract zoning at their last-known address. This notice shall contain a copy of the proposed conditions and restrictions, with a map indicating the property to be rezoned.

3. After holding a public hearing, the Planning Board shall make a recommendation to the Select Board on the proposaland its conformance with the Town's Comprehensive Plan and land use goals. This recommendation is advisory in nature; the Select Board may act independently of the recommendation of the Planning Board.

4. The Select Board shall hold a public hearing and, following any testimony, approve, modify or deny the contract zoning request. If the Select Board modifies the proposal bydoing any one or more of the following, the proposal will need to be referred back to the Planning Board for a public hearing and subsequent recommendation to the Select Board:

    a. Adds to the list of permitted uses or activities for hours of operation;
    b. Substantially modifies restrictions on the scale and density of development;
    c. Substantially modifies specifications for the design and layout of building(s), accessory buildings and other site improvements;
    d. Eliminates or makes less restrictive performance standards;
    e. Makes any other change or changes which substantially modify the proposed agreement that was presented to the Planning Board.

5. The term of the contract zoning agreement shall be set forth in the contract agreement. Any violation of the contract zoning agreement shall be considered a violation of this chapter and shall be subject to enforcement under the provisions of 30-A M.R.S. § 4452. The contract zoning agreement may include additional provision(s) concerning enforcement of specific provisions of the agreement.

II. NON- ARTICLE CONFORMANCE

SECTION 2.1 INTENT [AMENDED 5/17/08]

It is the intent of this Ordinance to promote land use conformities, except that non-conforming conditions that existed before the effective date of this Ordinance or amendments thereto shall be allowed to continue, subject to the requirements set forth in this section. Except as otherwise provided in this Ordinance, a non-conforming condition shall not be permitted to become more non-conforming.

SECTION 2.2 GENERAL

A. **Transfer of Ownership**: Non-conforming structures, lots, and uses may be transferred, and the new owner may continue the non-conforming use or continue to use the non-conforming structure or lot, subjectto the provisions of this Ordinance.

B. **Repairs and Maintenance:** This Ordinance allows, without a permit, the normal upkeep and maintenance of non-conforming uses and structures including repairs or renovations that do not involve expansion of the non-conforming use or structure, and such other changes in a non-conforming use or structure as federal, state, or local building and safety codes may require.

C. **Reduction in Lot Size:** Except as expressly provided in this Section or for taking by eminent domain ora conveyance in lie thereof, no lot shall be reduced in size by conveyance of a portion thereof unless (1) the remaining land meets the minimum lot size required for the zoning district in which the land is located,and (2) the land to be conveyed either meets the minimum lot size requirement or will be conveyed to the owner of abutting property, the town, or to a conservation organization in conjunction with covenants or similar restrictions that prohibit development. If the aforementioned lot is conveyed to the owner of abuttingproperty it must be combined with the abutter's property so that said non- conforming lot is no longer a non-conforming lot.

SECTION 2.3 NON-CONFORMING STRUCTURES [AMENDED 5/17/08]

Expansions: A non-conforming structure may be added to or expanded after obtaining a permit from the same permitting authority as for a new structure, if such addition or expansion does not increase thenon-conformity of the structure.

Further limitations within the Residential Shoreland District and Resource Protection District:

A. After January 1, 1989 if any portion of a structure is less than the required setback from the Royal River, Chandler Brook, the East Branch, Toddy Brook, Deer Brook, Pratt's Brook, the unnamed tributary to Chandler Brook, or a tributary stream, or the upland edge of Knight's Pond or the Deer Brook wetland, that portion of the structure shall not be expanded, as measured in floor area or volume, by 30 percent or more, during the lifetime of the structure. If a replacement structure conforms to the requirements of Section 2.3.C.3. Reconstruction or Replacement, and is less than the required setback from the aforementioned bodies of water, the replacement structure may not be expanded if the original structure existing on January 1, 1989 had been expanded by 30 percent in floor area and volume since that date.

B. Whenever a new, enlarged, or replacement foundation is constructed under a non-conforming structure, the structure and new foundation must be placed such that the setback requirement is met to the greatest practical extent as determined by the Planning Board or its designee, basing its decision on the criteria specified in Section 2.3.C. Relocation. If the completed foundation does not extend beyond the exterior dimensions of the structure, except for expansion in conformity with Section 2.3.A.1, and the foundation does not cause the structure to be elevated by more than 3 additional feet, as measured from the uphill side of the structure (from the original groundlevel

to the bottom of the first floor sill), it shall not be considered to be an expansion of the structure.

1. Relocation: A non-conforming structure may be relocated within the boundaries of the parcel on which the structure is located provided that the site of relocation conforms to all setback requirements to the greatest practical extent as determined by the Planning Board, or its designee, and provided that the applicant demonstrates that the present subsurface sewage disposal system meets the requirements of State law and the State of Maine Subsurface Wastewater Disposal Rules, or that a new system can be installed in compliance with the law and said Rules. In no case shall a structure be relocated in a manner that causes the structure to be more non-conforming. In determining whether the building relocation meets the setback to the greatest practical extent, the Planning Board, or its designee, shall consider the size of the lot, the slope of the land, the potential for soil erosion, the location of other structures on the property and on adjacent properties, the location of the septic system and other on-site soils suitable for septic systems, and the type and amount of vegetation to be removed to accomplish the relocation within the Residential Shoreland District and/or Resource Protection District. When it is necessary to remove vegetation in order to relocate a structure, the Planning Board shall require replanting of native vegetation to compensate for the destroyed vegetation. In addition, the area from which the relocated structure was removed must be replanted with vegetation. Replanting shall be required as follows:

    a. Trees removed in order to relocate a structure must be replanted with at least one native tree, 3 feet in height, for every tree removed. If more than 5 trees are planted, no one species of tree shall make up more than 50% of the number of trees planted. Replaced trees must be planted no further from the water or wetland than the trees that were removed. Other woody and herbaceous vegetation, and ground cover, that are removed or destroyed in order to relocate a structure must be re-established. An area at least the same size as the area where vegetation and/or ground cover was disturbed, damaged, or removed must be reestablished within the setback area. The vegetation and/or ground cover must consist of similar native vegetation and/or ground cover that was disturbed, destroyed or removed.

    b. Where feasible, when a structure is relocated on a parcel the original location of the structure shall be replanted with vegetation which may consist of grasses, shrubs, trees, or a combination thereof.

C. **Reconstruction or Replacement**:

1. Within the **Village Center District, Village Residential District and Farm and Forest District** the following shall apply: Any non-conforming structure which is located less than the required setback from a property line, or does not meet the lot coverage requirements, and which is removed, or damaged or destroyed, regardless of the cause may be reconstructed or replaced provided that a permit is obtained within 2 years of the date of said damage or destruction, and provided that such reconstruction or replacement is in compliance with the setback and lot coverage requirements to the greatest practical extent as determined by the Planning Board in accordance with the purposes of this Ordinance. The Planning Board shall consider any opportunity to increase conformity based on the configuration of the lot, but in no case shall a structure be reconstructed or replaced so as to increase its non-conformity.

2. Within the Residential Shoreland District and the Resource Protection District the following shall apply:

    a. Any non-conforming structure which is located less than the required setback from the Royal River, Chandler Brook, the East Branch, Knight's Pond, the Deer Brook wetland, Toddy Brook, Deer Brook, Pratt's Brook, the unnamed tributary to Chandler Brook or a tributary stream, and which is removed, or damaged or destroyed, regardless of the cause, by more

than 50 percent of the market value of the structure before such damage, destruction or removal, may be reconstructed or replaced provided that a permit is obtained within one year of the date of said damage, destruction, or removal, and provided that such reconstruction or replacement is in compliance with the water or wetland setback requirement to the greatest practical extent as determined by the Planning Board or its designee in accordance with the purposes of this Ordinance. In no case shall a structure be reconstructed or replaced so as to increase its non-conformity. If the reconstructed or replacement structure is less than the required setback it shall not be any larger than the original structure, except as allowed pursuantto Section 2.3.C.1. Expansions, above, as determined by the non-conforming floor area and volume of the reconstructed or replaced structure at its new location. If the total amount of floorarea and volume of the original structure can be relocated or reconstructed beyond the requiredsetback area, no portion of the relocated or reconstructed structure shall be replaced or constructed at less than the setback requirement for a new structure. When it is necessary to remove vegetation in order to replace or reconstruct a structure, vegetation shall be replanted in accordance with Section 2.3.C.2. Relocation, above.

b. Any non-conforming structure which is located less than the required setback from the Royal River, Chandler Brook, the East Branch, Knight's Pond, the Deer Brook wetland, Toddy Brook,Deer Brook, Pratt's Brook, the unnamed tributary to Chandler Brook, or a tributary stream, andwhich is removed by 50 percent or less of the market value, or damaged or destroyed by 50 percent or less of the market value of the structure, excluding normal maintenance and repair,may be reconstructed in place if a permit is obtained from the Code Enforcement Officer withinone year of such damage, destruction, or removal.

c. In determining whether the building reconstruction or replacement meets the setback to the greatest practical extent the Planning Board or its designee shall consider in addition to the criteria Section 2.3.B. Relocation, the physical condition and type of foundation present, if any.

D. **Change of Use of a Non-conforming Structure**: The use of a non-conforming structure may not be changed to another use unless the Planning Board after receiving a written application determines that thenew use will be consistent with the surrounding character and uses, and will have no greater adverse impact on the water body, tributary stream or wetland, or on the subject or adjacent properties and resources than the existing use. In determining that no greater adverse impact will occur, the Planning Board shall require written documentation from the applicant, regarding the probable effects on public health and safety, erosion and sedimentation, water quality, fish and wildlife habitat, vegetative cover, visual and actual points of public access to waters, natural beauty, flood plain management, archaeologicaland historic resources, and commercial fishing activities, and other functionally water- dependent uses.

SECTION 2.4 NON-CONFORMING USES [AMENDED 5/17/08]

A. **Expansions:** Expansions of non-conforming uses are prohibited, except that non-conforming residential uses may, after obtaining a permit from the Planning Board, be expanded within existing residential structures or within expansions of such structures as allowed in Section 2.3.A. Expansions.

B. **Resumption Prohibited:** A lot, building or structure in or on which a non-conforming use is discontinued for a period exceeding one year, or which is superseded by a conforming use, may not againbe devoted to a nonconforming use except that the Planning Board may, for good cause shown by the applicant, grant up to a one (1) year extension to that time period. This provision shall not apply to the resumption of a use of a residential structure provided that the structure has been used or maintained forresidential purposes during the preceding five (5)year period.

C. **Change of Use:** An existing non-conforming use may be changed to another non-conforming use provided that the proposed use has no greater adverse impact on the subject and adjacent properties and resources than the former use, as determined by the Planning Board. The determination of no greater adverse impact shall be made according to criteria listed in Section 2.3.D. Change of Use of a Non- conforming Structure.

SECTION 2.5 NON-CONFORMING LOTS [AMENDED 5/17/08]

A. Within the Village Center District, Village Residential District, and Farm and Forest District the following shall apply:

A non-conforming lot of record as of the effective date of this Ordinance (June 14, 2005) may be built upon,without the need for a variance, provided that all provisions of this Ordinance except lot area, lot width and/or lot frontage can be met. Variances relating to setback or other requirements not involving lot area,lot width and/or frontage shall be obtained by action of the Zoning Board of Appeals (ZBA). Further, a non-conforming lot of record as of the effective date of this Ordinance (June 14, 2005) does not have to be combined with a contiguous lot in the same ownership.

B. Within the Residential Shoreland District and the Resource Protection District the followingshall apply:

1. **Non-conforming Lots:** A non-conforming lot of record as of the effective date of this Ordinance or amendment thereto may be built upon, without the need for a variance, provided that such lot isin separate ownership and not contiguous with any other lot in the same ownership, and that all provisions of this Ordinance except lot area, lot width and shore frontage can be met. Variances relating to setback or other requirements not involving lot area, lot width or shore frontage shall beobtained by action of the ZBA.

2. **Contiguous Built Lots:** If two or more contiguous lots or parcels are in a single or joint ownershipof record at the time of the effective date of this ordinance provision (June 29, 1992) if all or part ofthe lots do not meet the dimensional requirements of this Ordinance, and if a principal use or structure exists on each lot, the non-conforming lots may be conveyed separately or together, provided that the State Minimum Lot Size Law (12 M.R.S. Section 4807-A through Section 4807-D) and the State of Maine Subsurface Wastewater Disposal Rules are complied with.

   If two or more principal uses or structures existed on a single lot of record on the effective date of this ordinance provision (June 29, 1992), each may be sold on a separate lot provided that the above referenced law and rules are complied with. When such lots are divided each lot thus createdmust be as conforming as possible to the dimensional requirements of this Ordinance.

   These provisions (B.2) shall also apply to those contiguous built lots that were conforming between June 29, 1992 and June 14, 2005, but became non-conforming on June 14, 2005.

3. **Contiguous Lots: Vacant or Partially Built:** If two or more contiguous lots or parcels are in singleor joint ownership of record at the time of or since adoption or amendment of this Ordinance, if anyof these lots do not individually meet the dimensional requirements of this Ordinance or subsequentamendments, and if one or more of the lots are vacant or contain no principal structure the lots shall be combined to the extent necessary to meet the dimensional requirements.

   This provision shall not apply to 2 or more contiguous lots, at least one of which is non-conforming,owned by the same person, persons or entity, on of the effective date of this ordinance provision (June 29, 1992) and recorded in the registry of deeds if the lot is served by a public sewer or can accommodate a subsurface sewage disposal system in conformance with

the State of Maine Subsurface Wastewater Disposal Rules; and

a. Each lot contains at least 100 feet of shore frontage and at least 20,000 square feet of lot area;or

b. Any lots that do not meet the frontage and lot size requirements of Section 2-5.B.3.a ContiguousLot: Vacant or Partially Built, are reconfigured or combined so that each new lot contains at least 100 feet of shore frontage and 20,000 square feet of lot area.

These provisions (B.3) shall also apply to those contiguous vacant or partially built lots that were conforming between June 29, 1992 and June 14, 2005, but became non-conforming on June 14, 2005.

SECTION 2.6 VESTED RIGHTS

Non-conforming use rights cannot arise by the mere filing of a notice of intent to build, an application for building permits, or an application for required state permits and approvals. Such rights arise when actual construction has begun, or in the case of pending applications, when the review process on a complete application commences. For such construction to be legal at the time it is commenced the owner must bein possession of and in compliance with validly issued permits, both state and local. Lots within any subdivision, legally recorded in the Cumberland County Registry of Deeds as of the date of adoption of this Ordinance (June 14, 2005), and made non-conforming by this Ordinance are deemed to have vested rights. A pending application shall be deemed complete when so designated by a formal vote by the Planning Board.

III. ADMINISTRATION AND ENFORCEMENT

SECTION 3.1 CODE ENFORCEMENT OFFICER (CEO) [AMENDED 5/17/08]

The Code Enforcement Officer (CEO) shall interpret and enforce the provisions of this Ordinance and shall require compliance with its requirements and restrictions. The CEO shall adopt procedures to facilitate the handling of all matters and questions arising hereunder within the scope of the CEO's authority and duties. Any decisions of the CEO denying a permit shall be in writing, a copy of which shall be given to the applicant. Appeals from decisions of the CEO shall be to the Zoning Board of Appeals (ZBA) in accordance with the provisions of Section VI. Variances and Appeals.

The CEO shall conduct on-site inspections to insure compliance with all applicable laws and conditions attached to permit approvals. The CEO shall also investigate all complaints of alleged violations of this Ordinance.

The CEO shall keep a complete record of all essential transactions of the office, including applications submitted, permits granted or denied, variances granted or denied, revocation actions, revocation of permits, appeals, court actions, violations investigated, violations found, and fees collected. On a biennial basis, a summary of all records associated with essential transactions in the Residential Shoreland District and Resource Protection District shall be submitted to the Director of the Bureau of Land and Water Quality within the Maine Department of Environmental Protection.

SECTION 3.2 APPROVALS AND PERMITS REQUIRED [AMENDED 5/17/08, 6/19/21]

Activities involving the use of land, the construction, structural alteration, repair, enlargement or relocationof a building or structure, or the demolition of a building or structure may require approvals and/or permitsunder the requirements of this Ordinance. All land use activities, including those that may not otherwise require a permit, that are located within the Groundwater Protection Overlay District must comply with Section 9.2. Groundwater Protection Overlay District: Best Management Practices. No activity subject to an approval and/or permit shall commence until after the issuance of all required approvals and permits. Any permit required by this Ordinance shall be in addition to any other permit required by other law or ordinance. A person who is issued a permit pursuant to this Ordinance shall have a copy of the permit onsite while the work authorized by the permit is performed. The following approvals or permits shall be required:

A. **Building/Land Use Permit from the Code Enforcement Officer:** No construction, structural alteration, enlargement, or relocation of a building or structure, or land use activity requiring a permit shallcommence until after the issuance of a Building/Land Use Permit by the CEO in accordance with Section 3.3. Building Permits/Land Use Permits. A building or land use permit for new residential uses must meetthe requirements of the Residential Growth Limitations in Section 3.3.E. No building or land use permit shall be issued until the proposed construction or alteration complies with the provisions of this Ordinance,approvals of the Planning Board or with a decision rendered by the Zoning Board of Appeals, as applicable.

B. **Driveway/Road Entrance Permit from Code Enforcement Officer:** No person may build or construct a driveway or road that provides access to a public street without first obtaining a Driveway/Road EntrancePermit from the CEO in accordance with Section 8.4. Driveway/Road Entrance Permit Requirements and the Town's Roadway Ordinance.

C. **Demolition Permit from the Code Enforcement Officer:** No demolition of a building or structure or major portion thereof, shall commence until after the issuance of a Demolition Permit from the CEO. **Whendemolition is proposed for a building or structure that was constructed prior to 1900,** the applicantmust notify the North Yarmouth Historical Society in writing, and present

evidence of such notification, at least 30 days prior to demolition. This provision will allow the Historical Society time to contact the owner regarding voluntary preservation of any items or structures with historical significance.

D. **Site Plan Review Permit from the Planning Board:** No use of land, buildings or structures listed in Section VII. Zoning District Regulations, Table 7-1 and identified as requiring Site Plan Review shall commence until after Site Plan Review approval has been obtained from the Planning Board in accordancewith Section IV. Site Plan Review and Conditional Use Procedures and the provisions of this Ordinance. Further, a Site Plan Review permit is required for all development proposals involving new construction, changes of use, or expansion of a structure or development, or expansion of a use by way of new construction. These provisions are also applicable to clearing and/or altering of land, construction of parking lots and roads and addition or alteration of accessory uses associated with land use activities listedin Table 7-1. Land Uses by District, requiring Site Plan Review. (See Section IV. Site Plan Review and Conditional Use Procedures, Section X. Performance and Design Standards for Site Plan Review and Subdivision the town's Roadway Ordinance, and other provisions of this Ordinance, as applicable.) [Amended 06/16/12]

E. **Subdivision Approval from the Planning Board:** Subdivision approval from the Planning Board is required for all land and buildings proposed for subdivision. (See Section V. Subdivision Review Procedures,Section X. Performance and Design Standards for Site Plan Review and Subdivision and other provisions of this Ordinance, as applicable.)

F. **Conditional Use Approval from the Planning Board:** No use of land, buildings or structures listed inSection VII. District Regulations, Table 7-1. Land Uses by District as requiring a Conditional Use Permit shall commence until after approval has been obtained from the Planning Board pursuant to Section IV. SitePlan Review and Conditional Use Procedures. Conditional uses require a Site Plan Review permit from the Planning Board.

G. **Variance from the Zoning Board of Appeals:** Requests for a variance must be made to the Zoning Board of Appeals in accordance with Section VI. Variances and Appeals.

H. **Temporary Housing Permit:** The CEO may issue permits for temporary housing for a period not to exceed 6 months with one 6-month renewal possible. This provision is limited to the intended occupants of a permanent dwelling unit that is being constructed or repaired and for which a Certificate of Occupancywill be sought. [Amended 5/13/06]

SECTION 3.3 BUILDING/LAND USE PERMITS [AMENDED 5/17/08; 6/19/21; 3/15/22; 6/17/24]

All applications for building/land use permits shall be submitted to the CEO on forms provided for that purpose.

A. **Submissions:** The application shall be accompanied by the following information:

1. A copy of the deed to the property, option to purchase the property or other documentation to demonstrate right, title or interest in the property on the part of the applicant. All applications shallbe signed by an owner or individual who can show evidence of right, title or interest in the propertyor by an agent, representative, tenant, or contractor of the owner with authorization from the ownerto apply for a permit, hereunder, certifying that the information in the application is complete and correct.

2. Receipt of the application fee, payable to the Town of North Yarmouth

3. A schedule of construction, including beginning and completion dates.

4. A map drawn to scale, showing the location, boundaries, dimensions, uses and size of the following:site; type of structure; setbacks from the front, side, rear lot lines; signage; parking areas; driveways; and existing and proposed streets, roads or ways. The map shall also show the locationof water lines, sewer lines, wells, septic systems and of all bodies of water, including wetlands andtheir distances from all structures proposed for the site.

5. If the proposed use is located within the **Residential Shoreland District or Resource Protection District**, evidence that there will be compliance with Section 9.1. Residential Shoreland District andResource Protection District Performance Standards.

6. If the proposed use is located within the **Groundwater Protection Overlay District**, evidence thatthere will be compliance with Section 9.2. Groundwater Protection Overlay District: Best Management Practices. The CEO may require that the applicant submit evidence of compliance pursuant to the provisions of Section 4.5. Groundwater Protection Overlay District: Additional Submission Requirements.

7. If the proposed use is located within the **Royal River Corridor Overlay District**, evidence that there will be compliance with Section 9.3. Royal River Corridor Overlay District.

8. If the proposed development is located in within the **Village Center District**, a scaled drawing providing evidence that the proposed building, renovation, or addition complies with Section 10.4 Building Standards.

9. Any other information necessary to show the proposal complies with the applicable provisions of this Ordinance, including Section VIII. General Requirements: Applicable to All Land Uses.

10. Evidence that all other state and federal permits required by the proposal have been approved.

B. **Subsurface Wastewater Disposal Permit Required:** A building/land use permit shall only be issued after a subsurface wastewater disposal permit has been secured (if required) by the applicant or his authorized agent.

C. **Action on Applications:** All applications shall be dated, and the CEO shall note upon each applicationthe date and time of its receipt. Within 14 working days of the receipt of a complete application for a building/land use permit, the CEO shall approve, deny, or refer such application to the appropriate body. Ifthe proposed activity requires Site Plan Review, Subdivision Review or review as a Conditional Use the CEO shall refer the applicant to the Planning Board. If the proposed activity requires a variance, the CEOshall refer the applicant to the Zoning Board of Appeals.

D. **Conditions:** Permits granted under this section may be made subject to reasonable conditions to ensure conformity with the purposes and provisions of this Ordinance. The applicant shall have the burdenof proving that the proposed activity is in conformance with the purposes and provisions of this Ordinance.

E. **Residential Growth Limitation (Cap):** In order to provide for orderly and reasonable growth, and to minimize undue disruption of town services, including a situation in which the rapid completion of major subdivisions, housing many families with school-age children, could outstrip the town's capability to expandits schools and other services soon enough to avoid serious overcrowding, building permits granted for construction of new residential units shall be limited on an annual basis, as follows:

1. **Calendar Year 2007 and Beyond.** For calendar year 2007 and beyond, the following shall apply:

   a. In the **Village Center District and Village Residential District**, combined, issuance of building permits for residential dwelling units shall not exceed 15 dwelling units per year. No single person, entity, corporation, or developer may apply for more than 6 new dwelling permits per year.

   b. In the **Farm and Forest District, Residential Shoreland District and Resource Protection District**, combined, building permits granted for the construction of new residential units shall not exceed 15 dwelling units per year. No single person, entity, corporation or developer may apply for more than 3 new dwelling permits per year.

2. The Zoning Board of Appeals shall have discretion to vary these requirements in the event of unduehardship based upon illness or disability.

3. Applications for residential building permits shall be processed in the order that the CEO receives complete applications.

4. If the allowed number of residential building permits is not issued within the calendar year, they shall not be carried over to the next year.

5. **Exemptions:** Exempted from the provisions of this section shall be the following:

   a. Lots which are created by way of a gift, sale or lease to a person related to the donor (that means a spouse, parent, grandparent, brother, sister, child, grandchild related by blood, marriage or adoption);

   b. A dwelling to be built upon a lot that has been owned by a resident of North Yarmouth for at least 10 years, provided that resident both owned the property and has been a resident of NorthYarmouth for at least 10 years, and that the dwelling will be occupied by that resident.

   c. Accessory dwelling units; and

   d. Affordable Housing, as defined herein

6. **Monitoring and Adjustment of the Residential Growth Limitation (Cap):** The CEO shall track the number of residential permits issued and residential units constructed in each Zoning District on an annual basis. This data will be used to evaluate and adjust the Residential Growth Cap. TheResidential Growth Cap shall be reviewed and updated no later than June 2007 to determine if it continues to be needed to control the pace, timing and location of development. The Residential Growth Cap is intended to allow only modest growth within the Farm and Forest District, ResourceProtection District and Residential Shoreland District. The Residential Growth Cap in the Village Center District and the Village Residential District is to be phased out. Any future application of the residential growth cap shall be based on an evaluation of the effectiveness of the land use regulations in controlling and directing growth, anticipated population growth, and specific municipal needs, including the need for additional school capacity. Any re-implementation of the residential growth cap in the Village Center District or the Village Residential District beyond June2007 shall require the following actions to be taken and criteria to be met:

   a. A clear, quantified assessment of the fiscal or other municipal capacity problems that necessitate the continued imposition of a growth cap. The number of units, over and above thecap that could be reasonably expected if the cap were lifted must be identified. The

municipal services impacted by development and unable to accommodate the additional units must be identified. Such identification will include a quantification of the services required by each unit and a clear quantification of existing capacity, demonstrating the lack of existing capacity.

b. The cap will be re-adjusted to allow growth at a rate demonstrated through the analysis completed in a. above.

c. The Capital Investment Plan and the Capital Improvement Plan will be reviewed and adjusted,as necessary, to address the capacity needs required to eliminate the growth cap.

F. **Revision of Proposed Work:** A new or revised building/land use permit is required if any substantial changes are made in size, use, or construction of the structure, building or land after issuance of the permit.

SECTION 3.4 EXPIRATION OF PERMITS [AMENDED 5/17/08]

Permits shall expire one year from the date of issuance of a permit if a substantial start is not made in construction or in use of the property during that period. If a substantial start is made within one year of issuance of a permit, the applicant shall have one additional year to complete the project, after which time the permit shall expire.

SECTION 3.5 TRANSFER OF PERMITS

Valid permits from the Planning Board or the CEO or valid variances from the Zoning Board of Appeals are transferable to a new owner or lessee of the property for which the permit or variance was given provided that the new owner or lessee signs a statement that they will adhere to the conditions and specifications of the issued permit. The new owners must conform to all construction, site development, uses, and permit conditions as specified in the permit application and the permits from the Planning Board or CEO, and any conditions attached in a valid variance from the ZBA. This provision of the Ordinance does not supersede the expiration of permits as outlined in the previous Section 3.4 Expiration of Permits.

SECTION 3.6 CERTIFICATE OF OCCUPANCY

A Certificate of Occupancy shall be issued by the CEO upon satisfactory completion of construction activities covered by the building/land use permit and shall remain effective so long as the use shall complywith all local and state land use and safety requirements existing at the time of issuance. A Certificate of Occupancy is required for all residential, commercial, institutional, industrial and other buildings or structures. The CEO may issue a Temporary Housing Permit for a period of 6 months during construction or alterations for partial occupancy of a building or structure pending its completion, provided that such permit may require such conditions and safeguards as will protect the safety of the occupants and the public. The CEO shall maintain a public record of all Certificates of Occupancy. **Failure to obtain a Certificate of Occupancy shall be a violation of this Ordinance.**

SECTION 3.7 FEES [AMENDED 6/19/21]

The Select Board shall establish fees for all permits where permit fees have not been specified within this Ordinance. A copy of the fee schedule shall be available from the Code Enforcement Officer.

SECTION 3.8 PERFORMANCE GUARANTEES [AMENDED 6/17/24]

A. **Purpose and Applicability:** The purpose of performance guarantees is to assure that the improvements proposed as a part of a development or subdivision are constructed and completed properly.The Planning Board may require performance guarantees for land use activities that

require Site Plan Review pursuant to Section IV. Site Plan Review and Conditional Use Procedures, and/or Subdivision Review pursuant to Section V. Subdivision Review Procedures.

B. **Types of Guarantees:** With submittal of the application for final plan approval, the applicant shall provide one of the following performance guarantees for an amount adequate to cover the total construction costs of all required improvements, taking into account the time-span of the constructionschedule and the inflation rate for construction costs:

1. Either a certified check payable to the town of North Yarmouth or a savings account or certificate of deposit naming the Town as owner, for the establishment of an escrow account;

2. A performance bond payable to the town issued by a surety company, approved by the Select Board;

3. An irrevocable letter of credit from a financial institution establishing funding for the construction ofthe subdivision or development, from which the town may draw if construction is inadequate, approved by the Select Board; or

4. An offer of conditional approval limiting the number of units built or lots sold until all required improvements have been constructed.

The conditions and amount of the performance guarantee shall be determined by the Planning Board withthe advice of the Road Commissioner, Town Engineer, Select Board, and/or Town Attorney.

C. **Contents of Guarantee:** The performance guarantee shall contain a construction schedule, cost estimates for each major phase of construction taking into account inflation, provisions for inspections of each phase of construction, provisions for the release of part or all of the performance guarantee to the developer, and a date after which the applicant will be in default and the town shall have access to the funds to finish construction.

D. **Escrow Account:** A cash contribution to the establishment of an escrow account shall be made by either a certified check made out to the town, the direct deposit into a savings account, or the purchase ofa certificate of deposit. For any account opened by the applicant, the town shall be named as owner or co-owner, and the consent of the town shall be required for a withdrawal. Any interest earned on the escrowaccount shall be returned to the applicant unless the town has found it necessary to draw on the account,in which case the interest earned shall be proportionately divided between the amount returned to the applicant and the amount withdrawn to complete the required improvements.

E. **Performance Bond:** A performance bond shall detail the conditions of the bond, the method for releaseof the bond or portions of the bond to the applicant, and the procedures for collection by the town. The bond documents shall specifically reference the subdivision or development for which approval is sought.

F. **Letter of Credit:** An irrevocable letter of credit from a bank or other lending institution shall indicate that funds have been set aside for the construction of the subdivision or development and may not be usedfor any other project or loan.

G. **Conditional Agreement:** The Planning Board at its discretion may provide for the applicant to enter into a binding agreement with the town in lieu of the other financial performance guarantees. Such an agreement shall provide for approval of the final plan on the condition that no more than a specified numberof lots may be sold or built upon until either:

1. It is certified by the Planning Board, or its agent, that all of the required improvements have been installed in accordance with these regulations and the regulations of the appropriate utilities; or

2. A performance guarantee, acceptable to the town, is submitted in an amount necessary to cover the completion of the required improvements at an amount adjusted for inflation and prorated for the portions of the required improvements already installed.

Notice of the agreement and any conditions shall be on the final plan that is recorded at the Cumberland County Registry of Deeds. Release from the agreement shall follow the procedures for release of the performance guarantees contained in Section H., below.

H. **Phasing of Development:** The Planning Board may approve plans to develop a major subdivision or development in separate and distinct phases. This may be accomplished by limiting final approval to thoselots/units abutting that section of the proposed subdivision/development street, which is covered by a performance guarantee. When development is phased, street construction shall commence from an existing public way. Final approval of lots in subsequent phases shall be given only upon satisfactory completion of all requirements pertaining to previous phases.

I. **Release of Guarantee:** Prior to the release of any part of the performance guarantee, the Planning Board shall determine to its satisfaction, in part upon the report of the Road Commissioner or other qualifiedindividual retained by the town and any other agencies and departments who may be involved, that the proposed improvements meet or exceed the design and construction requirements for that portion or phaseof the subdivision or development for which the release is requested.

J. **Default:** If upon inspection, the Road Commissioner or other qualified individual retained by the town finds that any of the required improvements have not been constructed in accordance with the plans and specifications filed as part of the application, he or she shall so report in writing to the CEO, the Select Board,the Planning Board, and the applicant or developer. The Select Board shall take any steps necessary to preserve the Town's rights.

K. **Improvements Guaranteed:** Performance guarantees shall be tendered for all improvements requiredto meet the standards of this Ordinance, including, but not limited to, improvements for the construction ofthe streets, storm water management facilities, public sewage collection or disposal facilities, centrally managed water systems, and erosion and sedimentation control measures.

SECTION 3.9 CONFORMANCE WITH OTHER LAWS, REGULATIONS [AMENDED 6/19/21]

A. **General:** It is the applicant's responsibility to purse all required local, state and federal permits. All existing and proposed land use activities shall be in conformance with all pertinent local, state, and federal ordinances, statutes, laws and regulations. The applicant must comply with all permit conditions and restrictions.

B. **Maine Site Location Act Reviews:** If the proposed development requires a permit under the Maine Site Location Act, 38 M.R.S. §§ 481–489-E, the developer must secure the approval of both the Department of Environmental Protection (DEP) and the Planning Board. When a proposed development requires approval of the Planning Board and the DEP, each review may be conducted simultaneously. However, each review will be conducted independently, and the Planning Board may deny approval of the development even though the DEP has granted an approval under the Provisions of the Site Location Act.

SECTION 3.10 LEGAL ACTION AND VIOLATIONS [AMENDED 5/17/08; 6/19/21]

A. **Nuisances and Enforcement:** Any violation of this Ordinance shall be deemed to be a nuisance. It shall be the duty of the Code Enforcement Officer to enforce the provisions of this Ordinance.

B. **Notice:** If the Code Enforcement Officer finds that any provision of this Ordinance is being or has beenviolated, he shall notify in writing the person(s) responsible for such violation and order the action necessary to correct it, including discontinuance of illegal use of land, buildings, structures, or work beingdone, removal of illegal buildings or structures, and abatement of nuisance conditions. A copy of such notices shall be forwarded to the Town Manager and the Select Board, and maintained as a permanent record.

C. **Enforcement Action:** When the above action does not result in the correction or abatement of the violation or nuisance condition, the Select Board, upon notice from the CEO, are hereby directed to institute any and all actions and proceedings, either legal or equitable, including seeking injunctions of violations and the imposition of civil penalties, that may be appropriate or necessary to enforce the provisions of the Ordinance in the name of municipality. The Select Board, or their authorized agent,are hereby authorized to enter into administrative consent agreements for the purpose of eliminating violations of this Ordinance and recovering fines without Court action. Such agreements shall not allow anillegal structure or use to continue unless there is clear and convincing evidence that the illegal structure or use was constructed or conducted as a direct result of erroneous advice given by an authorized municipal official and there is no evidence that the owner acted in bad faith, or unless the removal of the structure or use will result in a threat or hazard to public health and safety or will result in substantial environmental damage.

D. **Penalties:** Any person, including but not limited to a landowner, a landowner's agent or a contractor, who violates any provision or requirement of this Ordinance shall be penalized in accordance with 30-A, M.R.S. Section 4452.

IV. SITE PLAN REVIEW AND CONDITIONAL USE PROCEDURES

SECTION 4.1 PURPOSE

The Site Plan Review and Conditional Use provisions set forth in this Ordinance are intended to protect the public health and safety, promote the general welfare of the community, and conserve the environment by assuring that land use activities are designed and developed in a manner which assures that adequate provisions are made for traffic safety and access; emergency access; water supply; sewage disposal; management of stormwater, erosion, and sedimentation; protection of the groundwater; protection of the environment, wildlife habitat, fisheries, high value open space areas and other unique natural areas; protection of historic and archaeological resources; minimizing the adverse impacts on adjacent properties; and fitting the project harmoniously into the natural and man-made fabric of the community.

SECTION 4.2 APPLICABILITY

A. **Site Plan Review Permit Required:** This Section is applicable to all land use activities listed in Section VII. Zoning District Regulations, Table 7-1. Land Uses by District, as requiring Site Plan Review by the Planning Board. These provisions shall apply to development proposals involving new construction, changes of use, or expansion of a structure or development, or expansion of a use by way of new construction. These provisions are also applicable to the clearing and/or altering of land, construction of parking lots, streets and roads and addition or alteration of accessory uses associated with land use activities listed in Table 7-1 and identified as requiring Site Plan Review. In all instances the burden for providing the information upon which the permitting authority bases its findings and decision lies with the applicant.

B. **Conditional Use Approval Required:** All land uses activities listed in Section VII. Zoning District Regulations, Table 7.1. Land Uses by District as requiring a Conditional Use Permit in addition to Site PlanReview shall also be subject to the requirements of this Section, including Section 4.6 Conditional Uses.

SECTION 4.3 REVIEW AND APPROVAL AUTHORITY [AMENDED 6/19/21; 6/17/24]

A. **Planning Board Authorization:** The Planning Board is authorized to review and act on all site plans for development requiring Site Plan Review or Conditional Use approval. In considering site plans and conditional uses under this provision, the Planning Board may act to approve, disapprove, or approve theproject with conditions as are authorized by these provisions. In issuing any decision, the Planning Boardshall make written findings of fact establishing that a proposed development does or does not meet the standards of this Ordinance, including, but not limited to, Section VII. Zoning District Regulations and Section X. Performance and Design Standards for Site Plan Review and Subdivision Review; and Section Special District Standards and Section XI. Standards for Specific Activities, as applicable.

B. **Staff Review Team established.** There is hereby created a Staff Review Team. The Staff Review Team shall consist of the Code Enforcement Officer, Fire Rescue Chief, Road Commissioner, Town Engineer, and Town Planner, or their designees.

C. **Waivers:**

1. Application Requirements: The Planning Board may waive any of the submission requirements in this ordinance based upon a written request by the applicant. The applicant shall utilize the Town's Waiver Request form for any request. Such request must be made at the time of the pre-application conference or at the initial review of the application if no pre-application conference is held and provide narrative justifying the request. A waiver of any submission requirement may be granted only if the Planning Board finds that the information is not required

to determine compliance with the standards of the relevant ordinance standard. The Planning Board shall consider the size, character and intensity of the proposed project in determining which requirements may be waived.

2. Performance standards. The Planning Board may waive any of the review standards found in Section VIII. General Requirements: Applicable to All Uses, Section X. Performance and Design Standards for Site Plan Review and Subdivision Review and Section XI. Standards for Specific Activities, if it finds that extraordinary and unnecessary hardships, not self-imposed, may result from strict compliance with the review standards.

    a. In all cases, waivers shall not be deemed a right of the applicant, but rather shall be granted at the discretion of the Planning Board.

    b. The applicant shall utilize the Towns Waiver Request form for any request.

3. Waivers of Performance Standards to be shown on Approved Plan: All waivers of performance standards granted by the Planning Board shall be noted on the approved plan, including the date on which they were granted.

SECTION 4.4 PROCEDURES [AMENDED 6/19/21; 4/30/22; 6/17/24]

The Planning Board shall use the following procedures in reviewing applications for Site Plan Review and Conditional Uses:

A. **Pre-application Meeting**:

1. Prior to submitting a formal application for Site Plan Review, the applicant is required to attend two (2) pre-application meetings, the first with the Staff Review Team and the second with the Planning Board. Additional staff may be invited to attend the pre-application meeting at the discretion of the CEO. The pre-application meetings shall be informal and informational in nature. There shall be no fee for a pre-application review, and such review shall not cause the plan to be a pending application or proceeding under Title 1 M.R.S. §302. No decision on the substance of the plan shall be made at the pre-application meeting.

2. The purposes of the pre-application meetings are to:

    a. Allow the CEO, staff and Planning Board to understand the nature of the proposed use and the issues involved,

    b. Allow the applicant to understand the development review process and required submissions, including the required fees,

    c. Identify any issues that need to be addressed in the formal application, and

    d. Make the applicant aware of any opportunities for coordinating the development with community policies, programs, or facilities.

3. Site Visit: At the pre-application meeting, the Planning Board may schedule a site visit if deemed necessary.

4. Information Required: There are no formal submission requirements for a pre-application meeting. However, the applicant is encouraged to submit a sketch plan and narrative, and be prepared to describe the following topics:

    a. The proposed site, including its location, size, and general characteristics (a sketch plan

ofthe site and proposed project is strongly recommended),

b. The nature of the proposed use and potential development,

c. A site inventory, analysis and a narrative and/or plan describing how the proposed development plan relates to the site inventory and analysis,

d. Copies of any available deeds and easements affecting the subject lot(s),

e. Any issues or questions about existing municipal regulations and their applicability to the project,

f. Any requests for waivers from the submission requirements.

5. Site Plan Review Applications within the Groundwater Protection Overlay District: The CEOshall notify the Yarmouth Water District of the date, time and place of the pre-application meetingat least seven (7) days prior to the conference if the proposed use is to be located within the GroundwaterProtection Overlay District.

6. Site Plan Review Applications within the Royal River Corridor Overlay District**:** The CEO shall notify the Royal River Conservation Trust of the date, time and place of the pre-application meeting at least seven (7) days prior to the conference if the proposed use is to be located within the Royal River Corridor Overlay District.

B. **Application Submission and Review Procedures:** The applicant shall prepare and submit a Site Plan Review application, including a development plan and supporting documentation meeting the submission requirements set forth below. This material shall be submitted to the Code Enforcement Officer (CEO).

1. The CEO shall make a preliminary determination of whether the application is ready for Planning Board review within fourteen (14) days of receipt, before the application is placed on the Planning Board's agenda.

   a. The CEO or their designee shall notify the applicant in writing of this finding. If the CEO determines that the application is ready for Planning Board review, the notice shall specify the additional materials required to make the application ready for review and shall advise the applicant that the application will not be considered by the Board until the additional information is submitted.

2. The Office of the CEO shall circulate copies of the application to the Staff Review Team. [Amended 6/12/10]

3. If the proposed use is located within the Groundwater Overlay District, the applicant shall mail a complete copy of the application to the Yarmouth Water District at least fourteen (14) days prior to the date of the first meeting at which the application is to be considered.

4. Within thirty (30) days of the receipt of a formal Site Plan Review application, the Planning Board shall review the material and determine whether or not the submission is complete. If the application is determined to be incomplete, the Planning Board may vote to either table the application to a specific date and time or reject the application. The CEO will notify the applicant in writing of this finding. If the application is rejected, a future submission will be reviewed as a new application.

5. **Public Hearing:** Upon a determination that a complete application has been submitted for review,the Planning Board may decide a public hearing is necessary. The hearing shall be held

within thirty (30) days of finding the application complete, or at the next regularly scheduled Board meeting, after the Board's determination it has received a complete application, whichever occurs first. The CEO will publish the notice of the date, time, and place of the hearing in a newspaper of general circulation in the town & town website, the date of the- publication to be at least seven (7) days prior to the hearing. The applicant shall notify all property owners within five hundred (500) ft of the parcel on which a proposed development is located at least fourteen (14) days prior to the meeting at which the application is to be considered. The notice shall include an accurate description of the project, date, time & location of the public hearing and the availability of the application for review via certified mail. The Applicant must contact the CEO for abutter list thirty (30) days prior to the meeting. Evidence of mailing shall be submitted to the CEO prior to the hearing; provided, however that the failure of any abutting property owner to receive a notice of public hearing shall not necessitate another hearing, nor shall it invalidate any decision of the Planning Board with regard to that particular application.

6. If the applicant wishes to submit additional information, the supplemental information must be submitted to the CEO at least ten (10) days prior to the Planning Board meeting where it is to be considered, otherwise the supplemental information will not be included in Board packets for that meeting. New or updated materials will only be allowed at the meeting at the discretion of the Planning Board Chair.

7. **Site Visit:** The Planning Board may hold a site visit to review the existing conditions, field verify the information submitted and investigate a development proposal.The Planning Board may schedule this visit either before or after the first meeting at which the application is considered. The Planning Board shall reserve the right to postpone a scheduled site visit, if the Board Chair determines that the site visit is not possible due to surface conditions on the site or inclement weather conditions, or due to the unavailability of Planning Board members. The CEO shall notify the applicant of the site visit.

8. The Planning Board shall act to deny, to approve, or to approve the application with conditions. The Planning Board may impose such conditions as are deemed advisable to ensure compliance with the standards of approval.

9. **Written Findings of Fact:** In issuing its final decision, the Planning Board shall make written findings of fact establishing that the proposed development does or does not meet the standards of approval and other requirements of the town. The Planning Board shall vote to approve thewritten findings of fact, which shall be included in the final written decision.

10. The Board shall authorize the CEO to notify the applicant of the action of the Planning Board, including the findings of fact, and any conditions of approval. This requirement can be met throughthe distribution of minutes of the meeting containing the findings of fact and decision of the PlanningBoard.

11. All time limits provided for in this section may be extended by mutual agreement of the applicant and Planning Board.

C. **Final Approval and Filing:** Upon completion of the requirements of this Section and an approval vote by the majority vote of the Planning Board, the application shall be deemed to have final approval and the site plan shall be signed by the majority of the members of the Planning Board and must be filed with the CEO.

1. It is the applicant's responsibility to ensure that a complete application is filed with the CEO with sixty (60) days of the date upon which such plan is approved and signed by the Planning Board, or the permit shall be null and void.

2. If any phasing is proposed for the project, the applicant shall provide a phasing plan, with the

required performance guarantee, that includes the following information:

a. A map depicting the proposed phases of the project.

b. Approximate dates for construction start and completion for each phase of the project.

c. A construction management plan depicting items such as, but not limited to, construction access, material storage and any other information that will help the Planning Board understand the details related to the project's phased construction.

d. A phased site plan approval shall be valid for 5 (five) years from the original date of Planning Board approval. The first phase must be commenced within 2 years of approval, and each phase must be completed prior to commencing subsequent phases.

D. Post-approval coordination

1. **Performance Guarantee**

a. Performance guarantees shall be secured in accordance with Section 3.8 Performance Guarantees, for all projects that involve work on the items listed in subsection 2.b, below

2. **Inspection of Required Improvements**.

a. At least five (5) days prior to commencing construction of required improvements, the developer shall:

a. Notify the CEO in writing of the time when (s)he proposes to commence construction of such improvements, so that the CEO can arrange for inspections to assure that all town specifications, requirements, and conditions of approval are met during the construction of required improvements, and to assure the satisfactory completion of improvements and utilities required by the Planning Board.

b. Deposit with the Select Board a check made out to the town of North Yarmouth for the amount recommended by the Town Engineer. These funds shall be used by the town to establish an escrow in order to hire the services of a Maine registered professional engineer to review the specifications for all improvements, and to inspect the construction, including, but not limited to all improvements with public or private rights-of-way, as well as lighting, sidewalks, storm water facilities, water lines, sewer lines, and landscaping outside any rights-of-way, and all conditions of final approval. If these funds are sufficient to cover the cost of said review and inspection, the remaining funds shall be returned to the developer after satisfactory completionof the improvements, including cleanup. If the funds are not enough to cover said review and inspection, the developer shall submit additional funds to the Town to cover inspection fees.

c. If the inspecting official finds upon inspection of the improvements that any of the required /improvements have not been constructed in accordance with the plans and specifications filed by the developer, he shall so report in writing to the CEO and the developer. The town shall take any steps necessary to assure compliance with the approved plans.

3. If at any time it appears necessary or desirable to modify the required improvements before or during the construction of the required improvements, the inspecting official is authorized to approve minor modifications due to unforeseen circumstances such as encountering hidden outcrops of bedrock, natural springs, etc. The inspecting official shall issue any approval under this section in writing and shall transmit a copy of the approval to the CEO and the Planning Board. Revised plans shall be filed with the

Planning Board. For major modifications, such as relocation of rights-of-way, property boundaries, changes of grade by more than 1 percent, etc., the subdivider shall obtain permission from the Planning Board to modify the plans.

E. **Fees**:

1. Application Fee: An application fee, if required, must accompany an application for site plan review. This fee is intended to cover the cost of the town's administrative processing of the application. The application shall be accompanied by a non-refundable fee as specified in the Town of North Yarmouth Application, License and Permit Fees Ordinance, to be paid to the town of North Yarmouth stating the specific purpose of the fee. [Amended 6/12/10]

2. **Technical Review:** A technical review escrow is required at the time of application to cover the cost of any contract planning services. In addition, the Planning Board may refer the developer to a firm, or individual chosen by the Planning Board, for legal, technical, or engineering peer review of any submissions. The developer shall pay to the town a sum that the peer reviewer shall budget as sufficient to cover the cost of said review. If after final approval, the sum deposited with the town was more than sufficient to cover the cost, the town shall return the unexpended funds to the developer. If the deposit was not sufficient, the developer shall pay the balance to the town prior to final approval by the Board. If the Board deems a public hearing is necessary, the applicant shall be responsible for the cost associated with the public notice requirements.

3. **Establishment of Fees and Escrow:** The Select Board may, from time to time and after consultation with the Planning Board and/or CEO, establish the appropriate application fees and technical review escrow following posting of the proposed schedule of fees and public hearing.

F. **Submission Requirements**:

1. Applications for Site Plan Review and/or a Conditional Use must be submitted on application formsprovided by the town. The complete application form, evidence of payment of the required fees, and the required plans and related information must be submitted to the CEO. The submission must contain at least the following exhibits and information unless specifically waived in writing.

2. **All Applications for Site Plan Review and/or Conditional Use Approval** must contain the following information:

b. A fully executed and signed copy of the application for site plan review, plus ten (10) copies of the same or as requested by the CEO.

c. Evidence of payment of the application and technical review fees.

d. Ten (10) copies of written materials plus ten (10) sets of maps or drawings containing the information listed below, along with one (1) electronic version of the entire submission. The written materials must be contained in a bound report. The original maps or drawings must be at a scale sufficient to allow review of the items listed under the approval standards and criteria, but in no case shall be more than 100 feet to the inch for that portion ofthe tract of land being proposed for development. Map sets may be reduced to a size of 11 by 17 inches.

e. **General Information**:

1) Record owner's name, address, and phone number and applicant's name, addressand phone number, if different.

2) Names and addresses of all property owners within 500 feet of any and all property

boundaries.

3) Sketch map showing general location of the site within the town based upon a reduction of the tax maps.

4) Boundaries of all contiguous property under the total or partial control of the owner or applicant regardless of whether all or part is being developed at this time.

5) The tax map and lot number of the parcel or parcels on which the project is located.

6) A copy of the deed to the property, an option to purchase the property or other documentation to demonstrate right, title or interest in the property on the part of the applicant.

7) The name, registration number, and seal of the person who prepared the plan, if applicable.

8) Evidence of the applicant's technical and financial capability to carry out the project as proposed.

e. Existing Conditions:

1) Zoning classification(s), including overlay districts, of the property and the location of zoning district boundaries if the property is located 2 or more zoning districts and/or overlay districts or abuts a different district.

2) The bearings and length of all property lines of the property to be developed and the source of this information. The Planning Board may waive this requirement of aboundary survey when sufficient information is available to establish, on the ground, allproperty boundaries.

3) Location and size of any existing sewer and water mains, culverts and drains, on-site sewage disposal systems, wells, underground tanks or installations, and power and telephone lines and poles on the property to be developed, on abutting streets, or land that may serve the development, and an assessment of their adequacy and condition to meet the needs of the proposed use. Appropriate elevations must be provided as necessary to determine the direction of flow.

4) Location, names, and present widths of existing public and/or private roads and rights-of-way within or adjacent to the proposed development.

5) The location, dimensions and ground floor elevation of all existing buildings on the site.

6) The location and dimensions of existing driveways, streets, roads, parking and loading areas, walkways, and sidewalks on or immediately adjacent to the site.

7) Location of intersecting streets, roads or driveways within two hundred (200) feet of the site.

8) The location of open drainage courses, rivers, ponds, wetlands, vernal pools, streams, brooks, stonewalls, graveyards, fences, stands of trees, and other important or unique natural areas and site features, including but not limited to, 100-year floodplains, deer wintering areas, significant wildlife habitats, fisheries, scenic areas, habitat for rare and endangered plants and animals, unique natural communities and natural areas, sand and gravel aquifers, and historic and/or archaeological resources, together with a

description of such features.

9) Any project involving structural development or soil disturbance on or adjacent to sites listed on, or eligible to be listed on the National Register of Historic Places shall be submitted by the applicant to the Maine Historic Preservation Commission for review and comment at least thirty (30) days prior to action being taken by the Planning Board. The Planning Board shall consider comments received from the Maine Historic Preservation Commission prior to rendering a decision on the application.

10) The direction of existing surface water drainage across the site.

11) The location, front view, dimensions, and lighting of existing signs.

12) The location of all required building setbacks and any existing buffers on the property.

13) Location and dimensions of any existing easements and copies of existing covenants or deed restrictions.

14) The location of the nearest fire hydrant, dry hydrant or other water supply for fire protection.

15) All projects shall include written certification as to the location of the 100-year floodplain boundary to include a map of the 100-year floodplain boundary overlaid onto a U.S.G.S. Quadrangle Map or other topographic map by a professional land surveyor, registered professional engineer or architect. The determination shall be based on engineering practices recognized by the Federal Emergency Management Agency (FEMA) and the provisions of the Town's Floodplain Management Ordinance, including the most recent FEMA maps for the Town. All proposals shall include base flood elevations, flood boundaries, and, in a riverine 100-year floodplain, floodway data. These determinations shall be based on engineering practices recognized by FEMA. The development plan should include a statement that building is prohibited on the 100-year floodplain, and the restriction shall be included in any deed, lease, purchase and sale agreement, or document transferring or expressing intent to transfer any interest in real estate or structure.

f. Proposed Development Activity:

1) Estimated demand for water supply and sewage disposal together with the location and dimensions of all provisions for water supply and wastewater disposal, and evidence of their adequacy for the proposed use, including soils test pit data if on-site sewage disposal is proposed.

2) The direction of proposed surface water drainage across the site and from the site, with an assessment of impacts on downstream properties.

3) Provisions for handling all solid waste, including hazardous and special wastes and the location and proposed screening of any on-site collection or storage facilities.

4) The location, dimensions, and materials to be used in the construction of proposed driveways, parking and loading areas, and walkways and any changes in traffic flow onto or off-site.

5) A proposed landscaping and buffering plan. The landscaping plan submitted with each application shall identify major existing and proposed trees, shrubs, bushes, plant material, ground cover and natural features such as boulders and rock outcroppings. It

shall show present or proposed locations and planting details. The applicant shall include in the plan proposed methods to protect existing trees and growth during and after construction. These may include fences, berms, curbing, tree walls and similar devices.

6) The location and description of any stream, pond, vernal pool and/or wetland buffers as required in Section 10.3. Brook, Pond, Vernal Pool and Wetland Buffers. When buffers are required in accordance with Section 10.3 Brook, Pond, Vernal Pool and Wetland Buffers, the following plan submissions shall be required:

   a. The site plan shall show identified wetland types, the layout of the buffer and the topography of the site. The extent of existing and proposed vegetation and the pre and post development topography shall be depicted on the plan.
   b. Description of the existing vegetation in the proposed buffer area.
   c. If a new buffer is proposed, a description of how the buffer will be developed.
   d. Description of provisions for maintenance of the buffer area including restrictions on earth moving and vegetation clearing.
   e. List of deed restrictions and covenants to be included in deed to all affected properties or lots. A drawing with the buffer location and markers shall be attached to the deed.
   f. Plat with buffer location, marker locations, maintenance provisions, and a list of deed restrictions and/or covenants.

7) The location, dimensions, and ground floor elevation of all proposed buildings or building expansions proposed on the site.

8) Building elevations showing all sides of the proposed buildings and structures on the site, any existing features and structures proposed to be retained on the site, and abutting buildings, structures and architectural features, such as stone walls and fences, if such buildings, structures or features are located within 100 feet of the site.

9) Location, front view, materials, and dimensions of proposed signs together with the method for securing the sign.

10) The location of all utilities, including fire protection systems.

11) A general description of the proposed use or activity, including but not limited to the type of use, square footage involved, hours of operation, types and types and amount of traffic to be generated.

12) If the proposed development requires driveways or entrances onto a state or state aid highway, a permit from the Maine Department of Transportation indicating that the driveway or entrances conform to Title 23, section 704 and any rules adopted under that section;

13) An estimate of the peak hour and daily traffic to be generated by the project. A traffic impact analysis demonstrating the impact of the proposed project on the capacity, level of service and safety of adjacent streets, if the project or expansion will provide parking for 50 or more vehicles or generate more than 100 trips during the a.m.or p.m. peak hour based upon the latest edition of the Trip Generation Manual of the Institution of Traffic Engineers.

14) Storm water calculations, erosion and sedimentation control measures, and water quality and/or phosphorous export management provisions, if the project requires a storm water permit from the Maine Department of Environmental Protection or if the

Planning Board determines that such information is necessary based upon the scale of the project or the existing conditions in the vicinity of the project.

15) A utility plan showing, in addition to provisions for water supply and wastewater disposal, the location and nature of electrical, telephone, cable TV, and any other utility services to be installed on the site.

16) Graphic representations of how the development will look upon completion using artist renderings, photo manipulation, computer generated imaging or similar techniques. The submission of such graphic representations is encouraged for all applications, and many be required by the Planning Board where they determine that the location, scale or nature of the proposal requires such graphic representations to enable the Board to evaluate the application under the performance and design standards of this Ordinance.

17) A grading plan showing the existing and proposed topography of the site at 2-foot contour intervals, or such other interval as the Planning Board may determine.

18) A planting schedule keyed to the site plan indicating the general varieties and sizes of trees, shrubs, and other vegetation to be plated on the site, as well as information pertaining to provisions that will be made to retain and protect existing trees, shrubs, and other vegetation.

19) A storm water drainage and erosion control program showing:

    a. The existing and proposed method of handling storm water runoff.
    b. The direction of flow of the runoff, through the use of arrows.
    c. The location, elevation, and size of all catch basins, dry wells, drainage ditches, swales, retention basins, and storm sewers.
    d. Engineering calculations used to determine drainage requirements based upon the 25-year 24-hour storm frequency; this is required only if the project will significantly alter the existing drainage pattern due to such factors as the amount of new impervious surfaces (such as paving and building area) being proposed.
    e. Methods of controlling erosion and sedimentation during and after construction.
    f. A written Soil Erosion and Control Plan shall be required when the total disturbance area is greater than 20,000 square feet per acre.
    g. A written Soil Erosion and Control Plan shall be required for all developments that propose to remove any natural vegetation and disturb the soil within the Royal River Corridor Overlay District.

20) A groundwater impact analysis prepared by groundwater hydrologist for projects involving on-site water supply or sewage disposal facilities with a capacity of 2,000 gallons or more per day.
    a. If a site requires an on-site subsurface sewage disposal system it shall be installed in conformance with the State of Maine Subsurface Wastewater Disposal Rules (Rules). The applicant shall submit evidence of site suitability for subsurface sewage disposal prepared by a Maine Licensed Site Evaluator in full compliance with the requirements of the Rules. A test pit analysis, prepared by a Maine Licensed Site Evaluator shall be provided. A map indicating the location of all test pits dug on the site shall also be submitted.

21) A written statement from any utility district providing service to the project as to the adequacy of the water supply in terms of quantity and pressure for both domestic and fire flows, and the capacity of the sewer system to accommodate additional wastewater if public water or sewerage will be utilized.

22) A written statement from the Yarmouth Water District stating that adequate supply and pressure for both domestic and fire-fighting purposes can be provided without placing an undue burden on the source, treatment facilities, or distribution system involved. The development shall be responsible for paying the costs of system improvements necessary to serve the development.

23) Cost of the proposed development and evidence of the applicant's financial capacity to complete it. This evidence should be in the form of a letter from a bank or other source of financing indicating the name of the project, amount of financing proposed or available, and individual's or institution's interest in financing the project or in the form of a letter from a certified accountant or annual report indicating that the applicant has adequate cash flow to cover anticipated costs.

g. **Approval Block:** Space must be provided on the plan drawing for the signatures of the Planning Board and date together with the following words, "Approved: Town of North Yarmouth, North Yarmouth Planning Board".

G. **Minor Changes to Approved Plans**: [Amended 06/16/12]

Minor changes in approved plans necessary to address field conditions may be approved by the Code Enforcement Officer, at the discretion of the Code Enforcement Officer, provided that any such change does not affect compliance with the standards of this Ordinance or the approved plan or alter the essential nature of the proposal. Without limitation, minor changes shall not include (1) a change to a public or private right-of-way or easement, (2) a decrease in proposed buffering or landscaping, or (3) any issue involving a condition placed on the site plan approval.

H. **Amendments**: [Amended 06/16/12]

Any alteration to a site which is inconsistent with the approved site plan shall require an amendment to the site plan. Any alteration other than alterations approved by the CEO pursuant to Section 4.4 (F) shall require Planning Board approval prior to the alteration. The applicant may request that changes to an approved site plan that are not subject to approval under Section 4.4 (F) be placed on the Planning Board Agenda.

Prior to placement on the Agenda, the applicant shall meet with the Code Enforcement Officer to review the proposed changes and shall provide ten (10) copies of the revised site plan to the CEO at least fourteen (14) days prior to the next regular Planning Board meeting together with such other materials, which the CEO may limit, to address the scope of the proposed change to the site plan. The Board, at its discretion, may limit their review to the proposed amendments and other related elements.

SECTION 4.5 GROUNDWATER PROTECTION OVERLAY DISTRICT: ADDITIONAL SUBMISSION REQUIREMENTS

A. **Requirements:** In addition to the other requirements of this Section, all submittals for permit approval in the Groundwater Protection Overlay District shall include the following list of submissions, as applicable (See Section 9.2. Groundwater Protection Overlay District: Best Management Practices). The permitting authority, Planning Board or CEO, may modify or waive any of the following submission requirements because of the size or nature of the project or circumstances of the site such that requirement(s) would not be applicable and would not affect or conflict with the purposes of this Ordinance. The applicant shall provide information and materials as will enable the permitting authority to determine that standards for approval have been met, including appropriate hydrogeologic assessments, if applicable.

B. **Submissions**:

1. **A Site Plan** drawn to scale showing the following information:

   a. The boundaries of the Groundwater Protection Overlay District, labeled if crosses the parcel

   b. The location, size and description of all storage tanks and areas and types of materials to be stored

   c. Location and size, capacity and design of subsurface waste disposal systems and grease traps

   d. Location of nearby wells or surface water bodies

   e. Location of existing or proposed monitoring wells

   f. Locations and dimensions of buildings, parking, streets and roads and any other impervious structures or surfaces

2. **Written information**:

   a. Complete list of all chemicals, pesticides, fuels, nutrients (fertilizers, manure) and other potentially toxic or hazardous materials to be used or stored on the premises, and the quantitiesof these materials

   b. List of equipment to be used, parked, or stored

   c. Groundwater protection and pollution prevention provisions, and provisions to follow bestmanagement practices (including long-term maintenance provisions)

   d. Spill prevention plans and personnel training, if applicable

   e. Proposed method of performance guarantee, if applicable

   f. Any restrictions, conditions, covenants and easements

   g. A hydro geologic assessment of the proposed use or activity's impact on groundwater

   h. Background water quality data from on-site monitoring wells

   i. Any other information necessary to prove that the activity or use will not adversely impact thegroundwater quality.

C. **Additional Requirements for Certain Activities:** More than one of the categories listed below may apply to a particular use. Applicants should review the Best Management Practices in Section 9.2 Groundwater Protection Overlay District: Best Management Practices, and request assistance from the CEO and/or Planning Board should there be questions as to which categories apply.

1. **Subsurface Wastewater Disposal, Sewage Disposal and Subsurface Injection:**
   Provisions for sewage disposal including:

   a. Soil evaluator's report and septic system design

   b. Location of test pits keyed to site evaluator's or soil scientist's report

   c. For sites/uses producing more than 1,000 gallons of sewage per day, a hydrogeologic

assessment of nitrate concentrations at the property line

d. Evaluation of public/private sewer system capacity and integrity of sewer lines serving the development by a registered professional engineer or the sewer system superintendent

e. Provisions and designs for all floor drains, grease traps, and holding tanks

2. **Construction/Demolition** Provisions for solid waste, waste materials, and chemical handling, storage and disposal:

a. Provisions for sanitary facility

b. Provisions for fuel storage and refueling

c. Provisions for storage of any liquid chemicals used in the construction process

d. Provisions for storage of any bulk chemicals used in the construction process

e. Spill clean-up plans, personnel responsible for inspections and clean-up, spill clean up materials available on-site

3. **Storm Water Management:** Engineering calculations and plans that provide:

a. Design and capacity of subsurface collection facilities

b. Location and design of culverts, drains and other storm water control structures, existing and proposed

c. Surface drainage plan

d. Design of dry wells, storage, retention or detention facilities and other surface water impoundments

e. Storm water system outlets

f. Delineation of post development drainage areas

g. Plans for ice control, use of road salt, and snow removal

4. **Other Impoundments:** Engineering calculations and plans that provide:

a. Design and capacity of subsurface collection facilities

b. Design of dry wells, storage, retention or detention facilities and other surface water impoundments

c. Storm water system outlets

d. Delineation of post development drainage areas

e. Plans for ice control, use of road salt, and snow removal

f. Description of source of water, use of water and final water quality (water quality parameters to be specified by applicant)

g. Amount of consumptive and non-consumptive water use

5. Hazardous Materials, Petroleum Products and Other Chemicals: Handling and Storage

   a. Type and volume of chemical compounds handled and/or stored.

   b. Site plan showing all storage, handling and use areas for raw materials and wastes

   c. For outside areas, details to contain spills including:

      1) Drainage and contour information to prevent the flow of runoff from entering the storagearea and which keep leaks or spills from flowing off site

      2) Provisions for secondary containment where chemical storage occurs

      3) Provisions to collect chemicals should they enter the drainage system

      4) Provisions to segregate underground systems to insure that there are no cross connections

      5) Statement of emergency measures which can be implemented for surface drainage systems, including mutual aid agreements with hazardous materials spill response contractors

   d. For inside areas, details to contain spills including the:

      1) Design of dikes around rooms

      2) The location of floor drains and floor drain outlets

      3) The location of separators, holding tanks and/or drain outlets

      4) The specific location and design of underground storage structures

      5) The location and design of piping systems for wash waters and other wastes

      6) Measures to insure that inappropriate wastes are discharged and that wastes are discharged to appropriate sewers or treatment systems

   e. A spill prevention and control and countermeasure (SPCC) plan detailing:

      1) Materials and equipment to be available

      2) A training plan and schedule

      3) A list of contacts (Town/Water District/EPA/DEP/local fire officials) with phone numbers

      4) An inspection schedule

   f. A report by an industrial professional engineer or other competent professional detailing:

      1) Steps which have been taken to reduce the use of hazardous materials

      2) Actions which have been taken to control the amount of wastes generated

3) Any reports to provide information on the design theory or methodology for the above features

6. Installation of Monitoring Wells

   a. Location and construction specifications
   b. Intended purpose
   c. Sampling schedule and responsible parties
   d. Provisions for informing appropriate CEO and Yarmouth Water District of sampling results

SECTION 4.6 ROYAL RIVER OVERLAY DISTRICT: ADDITIONAL SUBMISSION REQUIREMENTS

A. **Purpose:** Refer to Section 9.3. Royal River Corridor Overlay District in the Land Use Ordinance for information related to the purpose and land areas included in this district.

B. Applications for a single-family dwelling, accessory dwelling unit or home occupation in this zoning district shall contain the following information:

   1. Completed building/land use application form - all applications for building/land use permits shall be submitted on forms provided for that purpose.

   2. A copy of the deed to the property, option to purchase the property or other documentation to demonstrate right, title or interest in the property on the part of the applicant.

   3. Receipt of the application fee, payable to the town to North Yarmouth

   4. A schedule of construction, including beginning and completion dates

   5. A map drawn to scale, showing the location, boundaries, dimensions, uses and size of the following: site; type of structure; setbacks from the front, side, rear lot lines; signage; parking areas; and existing and proposed driveways or right-of ways. The map shall also show the location of water lines, sewer lines, wells, septic systems and of all bodies of water, including wetlands and their distances from all structures proposed for the site.

   6. A written erosion and sedimentation control plan for activity during construction and after construction.

   7. Any other information necessary to show the proposal complies with the applicable provisions of this Ordinance, including Section VIII. General Requirements: Applicable to All Land Uses, and Section 9.3 Royal River Corridor Overlay District.

   8. A list of all other state and federal permits required by the proposal.

   9. Evidence that a subsurface wastewater disposal permit has been secured (if required) by the applicant or his authorized agent.

C. **Standards for Site Plan Review:** Uses listed in Section VII. Zoning District Regulations, Table 7-1. Land Uses by District, as requiring Site Plan Review in the Royal River Corridor Overlay District shall be designed to preserve open space and the natural vegetation of the corridor consistent with the town's vision for the Royal River Corridor as described in the Comprehensive Plan and the Open Space Plan. In addition to the submission requirements in Section 3.3. Building/Land Use Permits, the Planning Board shall require that the location of the building envelope be identified on the plan and a written description of the best management practices that will be used to limit soil erosion and sedimentation for all activities within the corridor that will involve disturbance of the natural vegetation, both during and after construction be submitted. The Planning Board may require that the best

management practices be pursuant to Section 9.1.U. Erosion and Sedimentation Control.

SECTION 4.7 CONDITIONAL USES

A. **Purpose:** The purpose of this section is to establish procedures and standards to enable the PlanningBoard to review applications for Conditional Uses. A Conditional Use is a structure or use that is generallynot appropriate in a given district, but with restrictions and if controlled as to location, size and off-site impacts may have no adverse effects upon the public health, safety or welfare, surrounding properties, the natural environment, or on municipal services. The only structures or uses that shall be permitted as conditional uses are those approved as Conditional Uses by thePlanning Board.

B. **Conditional Use Approval Required:** A building, structure or parcel of land may be used for a conditional use if the use is specifically listed as a conditional use in Section VII. Zoning District Regulations,Table 7-1. Land Uses by District, and Conditional Use approval is granted by the Planning Board. Any project involving the establishment of a new conditional use or the construction or expansion of a building,structure or activity for a conditional use must obtain site plan approval in accordance with this Section, Section V. Site Plan Review and Conditional Use Procedures, in addition to obtaining Conditional Use approval from the Planning Board.

C. **Action on the Application for a Conditional Use Permit:** The Planning Board may affirm, with conditions, or deny the application for a Conditional Use permit. The Planning Board may authorize issuance of a Conditional Use permit, upon a showing that:

1. The proposed use will not place a burden on municipal services which, due to its location or the characteristics of the site or proposed development, is significantly greater than the burden that would result from similar uses in other situations;

2. The proposed use will not create hazards to vehicular or pedestrian traffic on the streets, roads andsidewalks serving the proposed use as determined by the size and condition of such streets, roadsand sidewalks, lighting, drainage, intensity of use by both pedestrians and vehicles, and the visibilityafforded to pedestrians and the operators of motor vehicles;

3. The proposed use will not cause water pollution, sedimentation, erosion, contaminate any water supply nor reduce the capacity of the land to hold water so that a dangerous, aesthetically unpleasant, or unhealthy condition may result;

4. The proposed use will not create unhealthful conditions because of smoke, dust, or other airborne contaminants;

5. The proposed use will not create nuisances to neighboring properties because of odors, fumes, glare, hours of operation, noise, vibration or fire hazard, or unreasonably restricted access of lightand air to neighboring properties;

6. The proposed location for the use has no peculiar physical characteristics due to its size, shape, topography, or soils that will create or aggravate adverse environmental impacts on surrounding properties;

7. The proposed use will not adversely affect the value of adjacent properties; and

8. The design and external appearance of any proposed building will constitute an attractive and compatible additional to its neighborhood, although it need not have a similar design, appearanceor architecture.

D. **Conditions of Approval:**

1. The Planning Board may attach conditions to its approval of a Conditional Use. These conditionsmay include, but are not limited to, such requirements as:

    a. Off-street improvements
    b. Access restrictions
    c. Hours of use
    d. Buffering and screening
    e. Monitoring wells for subsurface sewage disposal systems as required in Section 10.17.
    f. Utility improvements
    g. Performance guarantees

2. The Planning Board may require that the terms of any conditions of approval be recorded in theCumberland County Registry of Deeds.

E. **Duration of a Conditional Use Approval:**

1. Provided all conditions and standards of approval are met, a Conditional Use shall be a continuing grant of permission for as long as the property is used for such purposes. The Conditional Use shallexpire if the owner:

    a. Physically alters the property and/or structure so it can no longer be used for the ConditionalUse, or

    b. Ceases to use the property for the approved Conditional Use for one year or more, or

    c. Fails to initiate the operation or conduct of the Conditional Use within one year of the date ofthe Planning Board's vote to grant said approval.

2. A Conditional Use may be expanded in area or function only with the granting of new Conditional Use approval by the Planning Board.

V. SUBDIVISION REVIEW PROCEDURES AND CRITERIA

SECTION 5.1 PURPOSES

The purposes of these regulations are:

1. To provide for an expeditious and efficient process for the review of proposed subdivisions;
2. To clarify the approval criteria of the state Subdivision Law, Title 30-A M.R.S., §4404;
3. To assure new development in the town meets the goals and conforms to the policies of the Comprehensive Plan;
4. To assure the comfort, convenience, safety, health and welfare of the people of the town;
5. To protect the environment and conserve the natural and cultural resources identified in the Comprehensive Plan as important to the community;
6. To assure that a minimal level of services and facilities are available to the residents of new subdivisions and that lots in subdivisions are capable of supporting the proposed uses and structures;
7. To minimize the potential impacts from new subdivisions on neighboring properties and on the town; and
8. To promote the development of an economically sound and stable community.

SECTION 5.2 AUTHORITY AND ADMINISTRATION [AMENDED 6/17/24]

These regulations are in accordance with the provisions of Title 30-A M.R.S., §§4401-4408.

A. Authority. The Planning Board shall administer these regulations. The provisions of these regulations shall pertain to all land and buildings proposed for subdivision within the boundaries of the town of North Yarmouth.

B. Waivers

1. Application Requirements: The Planning Board may waive any of the submission requirements in this ordinance based upon a written request by the applicant. The applicant shall utilize the Town's Waiver Request form for any request. Such request must be made at the time of the pre-application conference or at the initial review of the application if no pre-application conference is held and provide narrative justifying the request. A waiver of any submission requirement may be granted only if the Planning Board finds that the information is not required to determine compliance with the standards of the relevant ordinance standard. The Planning Board shall consider the size, character and intensity of the proposed project in determining which requirements may be waived.

2. Performance standards. The Planning Board may waive any of the review standards found in Section VIII. General Requirements: Applicable to All Uses, Section X. Performance and Design Standards for Site Plan Review and Subdivision Review and Section XI. Standards for Specific Activities, if it finds that extraordinary and unnecessary hardships, not self-imposed, may result from strict compliance with the review standards.

   a. In all cases, waivers shall not be deemed a right of the applicant, but rather shall be granted at the discretion of the Planning Board.

   b. The applicant shall utilize the Towns Waiver Request form for any request.

3. Waivers of Performance Standards to be shown on Approved Plan: All waivers of performance standards granted by the Planning Board shall be noted on the approved plan, including the date on which they were granted.

SECTION 5.3 PRE-APPLICATION MEETINGS, SKETCH PLAN AND SITE VISIT [AMENDED 6/19/21; 6/17/24]

A. **Purpose:** The purpose of the pre-application meetings and site visit are for the applicant to present general information regarding the proposed subdivision to the Staff Review Team and Planning Board and receive the comments prior to the expenditure of substantial sums of money on surveying, soils identification,and engineering by the applicant.

B. **Procedure:**

1. The applicant shall present the pre-application sketch plan to the Staff Review Team prior to being placed on a Planning Board agenda for pre-application sketch plan review.

2. The applicant shall present the pre-application sketch plan and make a verbal presentation regarding the site and the proposed subdivision. Following the applicant's presentation, the Boardmay ask questions and make suggestions to be incorporated by the applicant into the application.The date of the on-site inspection may be selected at this time.

3. The CEO shall notify the Yarmouth Water District (if applicable) of the proposed subdivision, the number of dwelling units proposed, the length of streets and roads,and the size and construction characteristics of any permitted building types with multiple residentials units, and commercial or industrial buildings. The CEO shall request that these officials comment upon the adequacy of their department's existing capital facilities to service the proposed subdivision.

C. **Submission:** The pre-application sketch plan shall show in simple sketch form the proposed layout of streets, lots, buildings and other features in relation to existing conditions. The sketch plan, which does not have to be engineered and may be a free-hand penciled sketch, should be supplemented with general information to describe the existing conditions of the site and the proposed development. It will be most helpful to both the applicant and the Planning Board to show site conditions such as high value open spaceareas (listed B.3), steep slopes, wet areas and vegetative cover to be identified in a general manner. It is recommended that the sketch plan be superimposed on or accompanied by a copy of the assessor's map(s) on which the land is located. The sketch plan shall be accompanied by:

1. A copy of a portion of the U.S.G.S. topographic map and an aerial map of the area showing theoutline of the proposed subdivision unless the proposed subdivision is less than 10 acres in size.
2. A copy of that portion of the Cumberland County Soil Survey covering the proposed subdivision,showing the outline of the proposed subdivision.

3. A copy of any available deeds, easements and encumbrances applicable to the proposed subdivision.

D. **Site Visit:** The Planning Board may hold a site visit of the property to review existing conditions, field verify the information submitted and investigate a development proposal. The Planning Board may schedule this visit either before or after the first meeting at which the application is considered. The Planning Board shall reserve the right to postpone the site visit, if the Board Chair determines that the site visit is not possible due to surface conditions of the site and inclement weather conditions, or due to the unavailability of Planning Board members. The CEO shall notify the applicant of the site visit.

E. **Rights not Vested:** The pre-application meeting, the submittal or review of the sketch plan or the site visit shall not be considered the initiation of the review process for the purposes of bringing theplan under the protection of Title 1 M.R.S. §302.

SECTION 5.4 SPECIAL SUBMISSION REQUIREMENTS

A. **Yarmouth Water District Review Required for Subdivisions Within the Groundwater Protection Overlay District or Proposing to Utilize the Public Water Supply:** If any portion of the subdivision is located within the Groundwater Protection Overlay District, or is to be served by the public water supply, the applicant shall submit complete preliminary and final plans, as submitted to the Planning Board, to theYarmouth Water District, and obtain written comments from the Yarmouth Water District regarding the subdivision's impact on the public water supply, and/or the District's agreement to provide public water service to the development, if applicable. The Yarmouth Water District's input shall be advisory.

SECTION 5.5 MINOR SUBDIVISION [AMENDED 6/19/21; 4/30/22; 6/17/24]

A. **General:** The Planning Board may require, where it deems necessary to make a determination regarding the criteria for approval from Title 30-A M.R.S. §4404 (See Section 5.12 Subdivision Review Criteria), or the standards of this Ordinance, that a Minor Subdivision comply with some or all of the submission requirements for a Major Subdivision.

B. **Procedure:**

1. Within (6) months after the site visit by the Planning Board, the applicant shall submit an application to the CEO for approval of a final plan at least thirty (30) days priorto a scheduled meeting of the Planning Board. Failure to submit the application within six (6) months shall require resubmission of the sketch plan to the Planning Board. The final plan shall approximate the layout shown on the sketch plan, plus any recommendations made by the PlanningBoard. [Amended 6/12/10]

2. **Application Fee:** The application shall be accompanied by a non-refundable fee as specified in the Town of North Yarmouth Application, License and Permit Fees Ordinance, to be paid by checkto the town of North Yarmouth stating the specific purpose of the fee. [Amended 6/12/10]

3. **Technical Review:** A technical review escrow is required at the time of application to cover the cost of the any contract planning services. In addition, the Planning Board may refer the developer to a firm, or individualchosen by the Planning Board, for legal, technical, or engineering peer review of any submissions. The developer shall pay to the town a sum that the peer reviewer shall budget as sufficient to cover the cost of said review. If after final approval, the sum deposited with the town was more than sufficient to cover the cost, the town shall return the unexpended funds to the developer. If the deposit was not sufficient, the developer shall pay the balance to the town prior to final approval by the Planning Board. If the Planning Board deems a public hearing is necessary, the applicant shall be responsible for the public notice requirements in subsection 7 below.

4. The applicant, or his duly authorized representative, shall attend the meeting of the Planning Boardto present the final plan. At the meeting at which an application for final plan approval of a minor subdivision is initially presented, the Planning Board shall issue a dated receipt to the applicant

    a. Require that the applicant notify in writing all large and small public drinking water suppliers, ifany portion of the subdivision is within a water source protection area, and

provide evidence that the notification was mailed.

b. Require that the applicant notify the clerk and the review authority of the neighboring municipalities if any portion of the subdivision abuts or crosses the municipal boundary, and provide evidence that the notification was mailed.

5. If at any time, the applicant wishes to bring additional information before the Board, the supplemental information must be submitted to the CEO at least ten (10) days prior to the Planning Board meeting, otherwise the supplemental information will not be included in Board packets for that meeting. New or updated materials will only be allowed at the meeting at the discretion of the Planning Board Chair.

6. **Determination of a Complete Application:** Within thirty (30) days of the receipt of the final plan application, the Board shall determine whether the application is complete and notify the applicantin writing of its determination. If the application is not complete, the Planning Board shall notify the applicant of the specific additional material needed to complete the application.

7. **Public Hearing:** Upon a determination that a complete application has been submitted for review,the Planning Board may decide a public hearing is necessary. The hearing shall be held within thirty (30) days of finding the application complete, or at the next regularly scheduled Board meeting, after the Board's determination it has received a complete application, whichever occurs first. The CEO will publish the notice of the date, time, and place of the hearing in a newspaper of general circulation in the town & town website, the date of the- publication to be at least seven (7) days prior to the hearing. The applicant shall notify all property owners within five hundred (500) ft of the parcel on which a proposed development is located at least fourteen (14) days prior to the meeting at which the application is to be considered. The notice shall include an accurate description of the project, date, time & location of the public hearing and the availability of the application for review via certified mail. The Applicant must contact the CEO for abutter list thirty (30) days prior to the meeting. Evidence of mailing shall be submitted to the CEO prior to the hearing; provided, however that the failure of any abutting property owner to receive a notice of public hearing shall not necessitate another hearing, nor shall it invalidate any decision of the Planning Board with regard to that particular application.

8. **Findings of Fact and Decision:** Within thirty (30) days from the public hearing or within 60 days of determining a complete application has been received, if no hearing is held, or within another timelimit as may be otherwise mutually agreed to by the Planning Board and the applicant, the PlanningBoard shall make findings of fact, and conclusions relative to the criteria contained in Title 30-A M.R.S. §4404, Section 5.12. Subdivision Review Criteria, and the other requirements of the Ordinance. If the Planning Board finds that all the criteria of the Statute and the requirements of this Ordinance have been met, they shall approve the final plan. If the Planning Board finds that any of the review criteria of the statute or Section 5.12. Subdivision Review Criteria,or the standards of Section X. Performance and Design Standards for Site Plan Review and Subdivisions Review, or any other provisions of this Ordinance have not been met, the Planning Board shall either deny the application or approve the application with conditions to ensure all of the criteria and standards will be met by the subdivision. The Planning Board shall issue a written notice of its decision to the applicant, including it findings, conclusions and any reasons for denial or conditions of approval.

C. **Submissions:** The final plan application shall consist of the following items:

1. A complete application form, along with ten (10) copies of all required submissions plus one

(1) electronic copy of all submission materials.

2. **Location Map:** The location map shall be drawn at a size adequate to show the relationship of theproposed subdivision to the adjacent properties, and to allow the Planning Board to locate the subdivision within the town. The location map shall show:

   a. Existing subdivisions in the proximity of the proposed subdivision.
   b. Locations and names of existing and proposed roads and streets.
   c. Boundaries and designations of zoning districts, including overlay districts.
   d. An outline of the proposed subdivision and any remaining portion of the owner's property if thefinal plan submitted covers only a portion of the owner's entire contiguous holding.

3. **Final Plan:** Two (2) full size plan sets measuring twenty-four (24) by thirty-six (36) inches along with eight (8) reduced size plan sets measuring eleven (11) by seventeen (17) inches, along with 10 copies of all submission materials must accompany the subdivision application.

   a. The plan shall be drawn to a scale of not more than one hundred (100) feet to the inch. Plans for subdivisions containing more than one hundred (100) acres may be drawn at a scale of not more than two hundred (200) feet to the inch provided all necessary detail can easily be read.
   b. If any part of the subdivision is located within the Groundwater Protection Overlay District, a reduced copy of the plan and all accompanying material shall be provided to the Yarmouth Water District no less than 7 days prior tothe meeting.

4. **Submission Requirements**: The application for approval of a Minor Subdivision shall include the following information. The Planning Board may require additional information to be submitted, where it finds necessary in order to determine whether the criteria of Title 30-A M.R.S §4404 or Section 5.12 Subdivision Review Criteria, are met.

a. Proposed name of the subdivision, or identifying title, and the name of the town in which it islocated, plus the assessor's map and lot numbers.

b. Verification of right, title, or interest in the property.

c. A standard boundary survey of the parcel, giving complete descriptive data by bearings and distances, made and certified by a registered land surveyor. The corners of the parcel shall belocated on the ground and marked by monuments. The plan shall indicate the type of monumentfound or to be set at each lot corner.

d. A copy of the most recently recorded deed for the parcel. A copy of all deed restrictions, easements, rights-of-way, or other encumbrances currently affecting the property.

e. A copy of any deed restrictions intended to cover all or part of the lots or dwellings in the subdivision.

f. An indication of the type of sewage disposal to be used in the subdivision.

   i) If a project requires an on-site subsurface sewage disposal system it shall be installed in conformance with the State of Maine Subsurface Wastewater Disposal Rules (Rules). The applicant shall submit evidence of site suitability for subsurface sewage disposal prepared by a Maine Licensed Site Evaluator in full compliance with the requirements of the Rules. A test pit analysis, prepared by a Maine Licensed Site Evaluator shall be provided. A map indicating the location of all test pits dug on the site shall also be

submitted.

ii) When sewage disposal is to be accomplished by connection to the public sewer, a written statement from the sewer district, stating that the district has the capacity to collect and treat the wastewater, shall be provided.

g. An indication of the type of water supply system(s) to be used in the subdivision.

i) When water is to be supplied by public water supply,
(1) a written statement from the Yarmouth Water District stating that adequate supply and pressure for both domestic and fire-fighting purposes can be provided without placing an undue burden on the source, treatment facilities, or distribution system involved.
(2) A written statement from the Yarmouth Water District and the North Yarmouth Fire Chief approving the complete design of the water supply system including the materials, size and location of mains, gate valves, hydrants and service connections.

ii) When water is to be supplied by private wells, evidence of adequate ground water supply and quality shall be submitted by a well driller or a hydrogeologist familiar with the area.

h. The date the plan was prepared, north point, and graphic map scale.

i. The names and addresses of the record owner, applicant, and individual or company who prepared the plan, and adjoining property owners.

j. A high intensity soil survey by a Maine certified soil scientist. Wetland areas shall be identified on the survey, regardless of size.

k. The number of acres within the proposed subdivision, location of property lines, existing buildings, vegetative cover type, and other essential existing physical features. On wooded sites, the plan shall indicate the area where clearing for lawns and structures shall be permitted and/or any restrictions to be placed on clearing existing vegetation. [Amended 5/13/06]

l. The location of all rivers, streams, brooks, wetlands, vernal pools or other water bodies within or adjacent (within 150 feet) to the proposed subdivision. When buffers are required in accordance with Section 10.3 Brook, Pond, Vernal Pool and Wetland Buffers, the following plan submissions shall be required:

i) The site plan shall show identified wetland types, the layout of the buffer and the topography of the site. The extent of existing and proposed vegetation and the pre and post development topography shall be depicted on the plan.
ii) Description of the existing vegetation in the proposed buffer area.
iii) If a new buffer is proposed, a description of how the buffer will be developed.
iv) Description of provisions for maintenance of the buffer area including restrictions on earth moving and vegetation clearing.
v) List of deed restrictions and covenants to be included in deed to all affected properties or lots. A drawing with the buffer location and markers shall be attached to the deed.
vi) Plat with buffer location, marker locations, maintenance provisions, and a list of deed restrictions and/or covenants.

m. Contour lines at the interval specified by the Planning Board, showing elevations in relation to mean sea level.

n. The zoning district(s) in which the proposed subdivision is located and location of any zoning boundaries affecting the subdivision.

o. The location and size of existing and proposed sewers, water mains, culverts, and drainage ways on or adjacent to the property to be subdivided.

p. The location, names, and present widths of existing streets and highways, and existing and proposed easements, building lines, parks and other open spaces on or adjacent to the subdivision. The plan shall contain sufficient data to allow the location, bearing and length of every street line, lot line, and boundary line to be readily determined and be reproduced upon the ground. These lines shall be tied to reference points previously established.

q. In order to facilitate the addition of the subdivision into the town property records and geographic information system, the applicant shall submit subdivision plans in electronic format in AutoCAD, GIS or other similar format (if available). Survey grade GPS data (specifically pin locations, wetland boundaries, etc.) when available, should also be submitted; these data should be clearly attributed so a user knows what the points/lines are referring to.

r. The location of any open space to be preserved and a description of proposed improvements and its management. If any portion of the subdivision is located within the Royal River CorridorOverlay District, a Royal River Corridor Management Plan that includes the location of any building envelops, preserves natural beauty, enhances wildlife habitat and corridors, considerspublic access to water bodies and inter-connected trails, and shows how the subdivision development will contribute to the town's vision for the Royal River Corridor as described in thetown's Comprehensive Plan and the Open Space Plan.

iii) Additionally, the following items must be submitted:
(1) A description of all common open space and any other lands and facilities proposed to be owned by the Town, a conservation organization, or a homeowner's association, or that will be permanently protected by conservation easements. This description shall include a map indicating the approximate location of these lands and facilities.
(2) A description of proposed ownership arrangements for the parcels as identified in Section 10.23.D.1.
(3) A description of the proposed conservation restrictions that will permanently protect these parcels.
(4) A description of the proposed arrangements and the responsible party for the long-term stewardship of the common open space including management objectives and techniques for each parcel or area.

iv) The Planning Board may waive the recreation & open space land requirements set forth in Section 10.23 if the Planning Board makes a written finding, supported by an explanation, that the useable open space and/or recreation land is not necessary due to the location of the proposed development near existing publicly accessible open space/recreation land; or where there are no opportunities to contribute to a network of open space land, or interconnected trails, walkways and/or bicycle paths. The applicant must submit a written request for the waiver and provide evidence necessary for the Planning Board to make it writing findings.

s. All parcels of land proposed to be dedicated to public use and the conditions of such dedication.Written offers to convey title to the town or a Planning Board approved land trust, conservationorganization or other public entity, of all public open spaces shown on the plan, and copies of agreements or other documents showing the manner in which open spaces to be retained by the applicant or lot owners are to be maintained shall be submitted. If open space or other landis to be offered to the town, written evidence that the Select Board are satisfied with the legal sufficiency of the written offer to convey title shall be included. If any of the open space and/orfacilities are to be reserved by the individual unit owners as common open space, the developer shall be required prior to final subdivision plan approval to incorporate a homeowners' association consisting of the individual unit owners, which incorporation must comply with Section 11.09 Homeowner/Property Owners' Associations.

t. All projects shall include written certification as to the location of the 100-year floodplain boundary to include a map of the 100-year floodplain boundary overlaid onto a U.S.G.S. Quadrangle Map or other topographic map by a professional land surveyor, registered professional engineer or architect. The determination shall be based on engineering practices recognized by the Federal Emergency Management Agency (FEMA) and the provisions of the Town's Floodplain Management Ordinance, including the most recent FEMA maps for the Town. All proposals shall include base flood elevations, flood boundaries, and, in a riverine 100-year floodplain, floodway data. These determinations shall be based on engineering practices recognized by FEMA. The final plan should include a statement that building is prohibited on the 100-year floodplain, and the restriction shall be included in any deed, lease, purchase and sale agreement, or document transferring or expressing intent to transfer any interest in real estate or structure.

u. A hydrogeologic assessment prepared by a Maine certified geologist or Maine registered professional engineer, experienced in hydrogeology, when public sewer does not serve the subdivision and any part of the subdivision is located within the Groundwater Protection Overlay District or the subdivision has an average density of more than one dwelling unit per 100,000 square feet. The Planning Board may require a hydrogeologic assessment in other cases where site considerations or development design indicate potential of adverse impacts on ground water quality. These cases include extensive areas of shallow to bedrock soils; or cluster developments in which the average density is less than one dwelling unit per 100,000 square feet but the density of the developed portion is in excess of one dwelling unit per 80,000square feet; or proposed use of shared or common subsurface wastewater disposal systems.The hydrogeological assessment shall be conducted in accordance with the provisions of Section 10.24. Water Quality.

v. An estimate of the amount and type of vehicular traffic to be generated on a daily basis and atpeak hours. The Planning Board may require that the trip generation rates used shall be takenfrom the Trip Generation Manual, 1991 edition, or most recent edition, published by the Instituteof Transportation Engineers. Trip generation rates from other sources may be used if the applicant demonstrates these sources better reflect local conditions, and if approved by the Planning Board.

w. If the proposed subdivision requires driveways or entrances onto a state or state aid highway,a permit from the Maine Department of Transportation indicating that the driveway or entrancesconform to 23 M.R.S. § 704 and any rules adopted under that section;

x. For subdivisions involving forty (40) or more parking spaces or projected to generate more than four hundred (400) vehicle trips per day, a traffic impact analysis, prepared by a Maine registered professional engineer with experience in traffic engineering, shall be submitted.

The analysis shall indicate the expected average daily vehicular trips, peak-hour volumes, access conditions at the site, distribution of traffic, types of vehicles expected, effect upon the level of service of the street giving access to the site and neighboring streets which may be affected, and recommended improvements to maintain the desired level of service on the affected streets.

y. A storm water management plan, prepared by a Maine registered professional engineer in accordance with Section 10.21. Storm Water Control.

z. A written Soil Erosion and Control Plan shall be required when:

i) The total disturbance area is greater than 20,000 square feet per acre.
ii) For all developments that propose to remove any natural vegetation and disturb the soil within the Royal River Corridor Overlay District.

aa. If any phasing is proposed for the project, the applicant shall provide a phasing plan that includes the following information:
i) A map depicting the proposed phases of the project.
ii) Approximate dates for construction start and completion for each phase of the project.
iii) A construction management plan depicting items such as, but not limited to, construction access, material storage and any other information that will help the Planning Board understand the details related to the project's phased construction.

bb. Areas within or adjacent (within 150 feet) to the proposed subdivision which have been identifiedas conservation land, scenic views, and high or moderate value wildlife habitat by the Beginningwith Habitat Program and the Comprehensive Plan. The plan shall indicate appropriatemeasures for the preservation of these areas in accordance with the provisions of thisOrdinance.

cc. The location and method of disposal for land clearing and construction debris.

dd. Information regarding timber harvesting as required by State Statute (See Section 5.12,19). [Amended 06/16/12]

ee. Submissions pursuant to Section 10.4. Building Design Standards, if applicable.

ff. Any project involving structural development or soil disturbance on or adjacent to sites listed on, or eligible to be listed on the National Register of Historic Places, as determined by the CEO or Planning Board shall be submitted by the applicant to the Maine Historic Preservation Commission for review and comment at least thirty (30) days prior to action being taken by the Planning Board. The Planning Board shall consider comments received from the Maine Historic Preservation Commission prior to rendering a decision on the application.

SECTION 5.6 PRELIMINARY PLAN FOR MAJOR SUBDIVISION [AMENDED 6/19/21; 4/30/22; 6/17/24]

A. **Procedure:**

1. Within six (6) months after the site visit by the Planning Board, the applicant shall submit an application for approval of a preliminary plan to the CEO at least thirty (30) days prior to a scheduled meeting of the Planning Board. Failure to submit an application within 6 months shall require resubmission of the sketch plan to the Planning Board. The preliminary plan shall

approximate thelayout shown on the Sketch Plan, plus any recommendations made by the Planning Board.

2. **Application Fee:** All applications for preliminary plan approval for a Major Subdivision shall be accompanied by a non-refundable application fee as specified in the Town of North Yarmouth Application, License and Permit Fees Ordinance, to be paid by check to the town of North Yarmouthstating the specific purpose of the fee. [Amended 06/12/10]

3. **Technical Review:** A technical review escrow is required at the time of application to cover the cost of any contract planning services. In addition, the Planning Board may refer the developer to a firm, or individualchosen by the Planning Board, for legal, technical, or engineering peer review of all submissions. The developer shall pay to the town a sum that the peer reviewer shall budget as sufficient to cover the cost of said review. If afterfinal approval, the sum deposited with the town was more than sufficient to cover the cost, the townshall return the unexpended funds to the developer. If the deposit was not sufficient, the developershall pay the balance to the town prior to final approval by the Board.

4. The applicant, or his duly authorized representative, shall attend the meeting of the Planning Boardto present the preliminary plan application. Failure to attend the meeting to present the preliminaryplan application shall result in a delay of the Planning Board's receipt of the plan until the next meeting that the applicant attends.

5. At the meeting at which an application for preliminary plan approval of a major subdivision is initially present, the Planning Board shall issue a dated receipt to the applicant.

    a. Require that the applicant notify the clerk and the review authority of the neighboring municipalities if any portion of the subdivision abuts or crosses the municipal boundary, and provide evidence that such notification was mailed.

6. If at any time, the applicant wishes to bring additional information before the Planning Board, the supplemental information must be submitted to the CEO at least ten (10) days prior to the Planning Board meeting, otherwise the supplemental information will not be included in Board packets for that meeting. New or updated materials will only be allowed at the meeting at the discretion of the Planning Board Chair.

7. **Determination of a Complete Application:** Within thirty (30) days of the receipt of the preliminary plan application, the Planning Board shall determine whether the application is complete and notify theapplicant in writing of its determination. If the application is not complete, the Planning Board shall notify the applicant of the specific additional material needed to complete the application.

8. **Public Hearing:** Upon a determination that a complete application has been submitted for review,the Planning Board may decide a public hearing is necessary. The hearing shall be held within thirty (30) days of finding the application complete, or at the next regularly scheduled Board meeting, after the Board’s determination it has received a complete application, whichever occurs first. The CEO will publish the notice of the date, time, and place of the hearing in a newspaper of general circulation in the town & town website, the date of the- publication to be at least seven (7) days prior to the hearing. The applicant shall notify all property owners within five hundred (500) ft of the parcel on which a proposed development is located at least fourteen (14) days prior to the meeting at which the application is to be considered. The notice shall include an accurate description of the project, date, time & location of the public hearing and the availability of the application for review via certified mail. The Applicant must contact the CEO for abutter list thirty (30) days prior to the meeting. Evidence of mailing shall be submitted to the CEO prior to the hearing; provided, however that the failure of any abutting property owner

to receive a notice of public hearing shall not necessitate another hearing, nor shall it invalidate any decision of the Planning Board with regard to that particular application.

9. **Findings of Fact and Decision:** Within thirty (30) days from the public hearing or within sixty (60) days of determining a complete application has been received, if no hearing is held, or within another timelimit as may be otherwise mutually agreed to by the Planning Board and the applicant, the PlanningBoard shall make findings of fact on the application, and approve, approve with conditions, or denythe preliminary plan application. The Planning Board shall specify in writing its findings of facts andreasons for any conditions or denial.

10. When granting approval to a preliminary plan, the Planning Board shall state the conditions of suchapproval, if any, with respect to:

    a. The specific changes which it will require in the final plan;

    b. The character and extent of the required improvements for which waivers may have been requested and which the Planning Board finds may be waived without jeopardy to the public health, safety, and general welfare; and

    c. The construction items for which cost estimates and performance guarantees will be required as prerequisite to the approval of the final plan.

11. Phased approvals. At the time the Planning Board grants final plan approval, it may permit the plan to be divided into two or more sections subject to any conditions the Planning Board deems necessary in order to ensure the orderly development of the Plan. If any town or quasi-municipal department head notified of the proposed subdivision informs the Planning Board that their department or district does not have adequate capital facilities to service the subdivision, the Planning Board may require the plan to be divided into two or more sections subject to any conditions the Planning Board deems necessary in order to allow the orderly planning, financing and provision of public services to the subdivision. If the superintendent of schools indicates that there is less than 20 percent excess classroom capacity existing in the school(s) which will serve the subdivision, considering previously approved but not built subdivisions, the Planning Board may require the plan to be divided into sections to prevent classroom overcrowding. If the expansion, addition or purchase of the needed facilities is included in the town's capital improvements program, the time period of the phasing shall be no longer than the time period contained in the capital improvements program for the expansion, addition or purchase.

12. Approval of a preliminary plan shall not constitute approval of the final plan or intent to approve thefinal plan, but rather it shall be deemed an expression of approval of the design of the preliminary plan as a guide to the preparation of the final plan. The final plan shall be submitted for approval by the Planning Board upon fulfillment of the requirements of these regulations and the conditionsof preliminary approval, if any. Prior to the approval of the final plan, the Planning Board may requirethat additional information be submitted and changes in the plan be made as a result of further study of the proposed subdivision or as a result of new information received.

B. **Submissions:** The preliminary plan application shall consist of the following items:

1. **Application Form**

2. **Location Map:** The location map shall be drawn at a size adequate to show the relationship of theproposed subdivision to the adjacent properties, and to allow the Planning Board to locate the subdivision within the town. The location map shall show:

    a. Existing subdivisions in the proximity of the proposed subdivision.

b. Locations and names of existing and proposed streets and roads.

c. Boundaries and designations of zoning districts.

d. An outline of the proposed subdivision and any remaining portion of the owner's property if thepreliminary plan submitted covers only a portion of the owner's entire contiguous holding.

3. **Preliminary Plan:** The preliminary plan shall be submitted in ten (10) copies of one or more maps or drawings, which may be printed or reproduced on paper, with all dimensions shown in feet or decimals of a foot. Two (2) full size plan sets measuring twenty-four (24) by thirty-six (36) inches along with eight (8) reduced size plan sets measuring eleven (11) by seventeen (17) inches, along with ten (10) copies of all submission materials must accompany the subdivision application, along with one (1) electronic copy of all submission materials.

   a. The plan shall be drawn to a scale of not more than one hundred (100) feet to the inch. Plans for subdivisions containing more than one hundred (100) acres may be drawn at a scale of not more than two hundred (200) feet to the inch provided all necessary detail can easily be read.
   b. If any part of the subdivision is located within the Groundwater Protection Overlay District, a reduced copy of the plan and all accompanying material shall be provided to the Yarmouth Water District no less than 7 days prior to the meeting.

4. **Submission Requirements:** The application for preliminary plan approval shall include the following information. The Planning Board may require additional information to be submitted, where it finds necessary in order to determine whether the criteria of Title 30-A M.R.S. **§**4404 orSection 5.12 Subdivision Review Criteria, are met.

   a. Proposed name of the subdivision and the name of the town, in which it is located, plus the Assessor's map and lot numbers.

   b. Verification of right, title or interest in the property.

   c. A standard boundary survey of the parcel, giving complete descriptive data by bearings and distances, made and certified by a Maine registered land surveyor. The corners of the parcel shall be located on the ground and marked by monuments.

   d. A copy of the most recently recorded deed for the parcel. A copy of all deed restrictions, easements, rights-of-way, or other encumbrances currently affecting the property.

   e. A copy of any deed restrictions intended to cover all or part of the lots or dwellings in the subdivision.

   f. An indication of the type of sewage disposal to be used in the subdivision.

      1) When sewage disposal is to be accomplished by connection to the public sewer, a letter from the sewer district stating that the district has the capacity to collect and treat the wastewater shall be provided.

      2) If a project requires an on-site subsurface sewage disposal system it shall be installed in conformance with the State of Maine Subsurface Wastewater Disposal Rules (Rules). The applicant shall submit evidence of site suitability for subsurface sewage disposal prepared by a Maine Licensed Site Evaluator in full compliance with the requirements of the Rules. A test pit analysis, prepared by a Maine Licensed Site Evaluator shall be

provided. A map indicating the location of all test pits dug on the site shall also be submitted.

g. An indication of the type of water supply system(s) to be used in the subdivision.

1) When water is to be supplied by public water supply, applicant must provide a written statement from the Yarmouth Water District stating that adequate supply and pressure for both domestic and fire-fighting purposes can be provided without placing an undue burden on the source, treatment facilities, or distribution system involved. The development shall be responsible for paying the costs of system improvements necessary to serve the subdivision.
2) When water is supplied by a new centrally managed water system, applicant must provide evidence of approval of the system by the Maine Drinking Water Program.

h. The date the plan was prepared, north point, and graphic map scale.

i. The names and addresses of the record owner, applicant, and individual or company who prepared the plan and adjoining property owners.

j. A high intensity soil survey by a Maine certified soil scientist. Wetland areas shall be identifiedon the survey, regardless of size.

k. The number of acres within the proposed subdivision, location of property lines, existing buildings, vegetative cover type, and other essential existing physical features.

l. The location of all rivers, streams, brooks, wetlands, vernal pools or other water bodies within or adjacent (within 150 feet) to the proposed subdivision. When buffers are required in accordance with Section 10.3 Brook, Pond, Vernal Pool and Wetland Buffers, the following plan submissions shall be required:

1) The site plan shall show identified wetland types, the layout of the buffer and the topography of the site. The extent of existing and proposed vegetation and the pre and post development topography shall be depicted on the plan.
2) Description of the existing vegetation in the proposed buffer area.
3) If a new buffer is proposed, a description of how the buffer will be developed.
4) Description of provisions for maintenance of the buffer area including restrictions on earth moving and vegetation clearing.
5) List of deed restrictions and covenants to be included in deed to all affected properties or lots. A drawing with the buffer location and markers shall be attached to the deed.
6) Plat with buffer location, marker locations, maintenance provisions, and a list of deed restrictions and/or covenants.

m. Contour lines at the interval specified by the Planning Board, showing elevations in relation to mean sea level.

n. The zoning district in which the proposed subdivision is located and the location of any zoningboundaries affecting the subdivision.

o. The location and size of existing and proposed sewers, water mains, culverts, and drainage ways on or adjacent to the property to be subdivided.

p. The location, names, and present widths of existing roads, streets, highways, easements, building lines, parks and other open spaces on or adjacent to the subdivision.

q. The width and location of any streets, public improvements or open space shown upon the official map and the Comprehensive Plan, if any, within the subdivision.

r. The proposed lot lines with approximate dimensions and lot areas.

s. If the proposed subdivision requires driveways or entrances onto a state or state aid highway, a permit from the Maine Department of Transportation indicating that the driveway or entrancesconform to 23 M.R.S. § 704 and any rules adopted under that section;

t. All parcels of land proposed to be dedicated to public use and the conditions of such dedication.

u. The location of any open space to be preserved and a description of proposed ownership, improvement and management. If any portion of the subdivision is located within the Royal River Corridor Overlay District, a Royal River Corridor Management Plan that includes the location of any building envelops, preserves natural beauty, enhances wildlife habitat and corridors, considers public access to water bodies and inter-connected trails, and shows how the subdivision development will contribute to the town's vision for the Royal River Corridor asdescribed in the town's Comprehensive Plan and the Open Space Plan.

    1) Additionally, the following items must be submitted:
        i. A description of all common open space and any other lands and facilities proposed to be owned by the Town, a conservation organization, or a homeowner's association, or that will be permanently protected by conservation easements. This description shall include a map indicating the approximate location of these lands and facilities.
        ii. A description of proposed ownership arrangements for the parcels as identified in Section 10.23.D.1.
        iii. A description of the proposed conservation restrictions that will permanently protect these parcels.
        iv. A description of the proposed arrangements and the responsible party for the long-term stewardship of the common open space including management objectives and techniques for each parcel or area.

v. The area on each lot where existing forest cover will be permitted to be removed and converted to lawn, impermeable surfaces, structures or other cover and any proposed restrictions to be placed on clearing existing vegetation.

w. All projects shall include written certification as to the location of the 100-year floodplain boundary to include a map of the 100-year floodplain boundary overlaid onto a U.S.G.S. Quadrangle Map or other topographic map by a professional land surveyor, registered professional engineer or architect. The determination shall be based on engineering practices recognized by the Federal Emergency Management Agency (FEMA) and the provisions of the Town's Floodplain Management Ordinance, including the most recent FEMA maps for the Town. All proposals shall include base flood elevations, flood boundaries, and, in a riverine 100-year floodplain, floodway data. These determinations shall be based on engineering practices recognized by FEMA. The preliminary plan should include a statement that building is prohibited on the 100-year floodplain, and the restriction shall be included in any deed, lease, purchase and sale agreement, or document transferring or expressing intent to transfer any interest in real estate or structure.

x. A hydrogeologic assessment prepared by a Maine certified geologist or Maine registered

professional engineer, experienced in hydrogeology, when the subdivision is not served by public sewer and any part of the subdivision is located within the Groundwater Protection Overlay District or the subdivision has an average density of more than one dwelling unit per 100,000 square feet. The Planning Board may require a hydrogeologic assessment in other cases where site considerations or development design indicate potential of adverse impacts on ground water quality. These cases include extensive areas of shallow to bedrock soils; or cluster developments in which the average density is less than one dwelling unit per 100,000 square feet but the density of the developed portion is in excess of one dwelling unit per 80,000square feet; or proposed use of shared or common subsurface wastewater disposal systems.The hydrogeologic assessment shall be conducted in accordance with the provisions of Section 10.24 Water Quality.

y. An estimate of the amount and type of vehicular traffic to be generated on a daily basis and atpeak hours. Trip generation rates used shall be taken from the *Trip Generation Manual,* 1991 edition, or most recent edition, published by the Institute of Transportation Engineers. Trip generation rates from other sources may be used if the applicant demonstrates these sourcesbetter reflect local conditions, and if approved by the Planning Board.

z. Areas within or adjacent (within 150 feet) to the proposed subdivision which have been identifiedas conservation land, scenic views, and high or moderate value wildlife habitat by the Beginningwith Habitat Program and the Comprehensive Plan. The plan shall indicate appropriatemeasures for the preservation of these areas in accordance with the provisions of thisOrdinance.

aa. Information regarding timber harvesting as required by State Statute (See Section 512,19). [Amended 06/16/12]

bb. Any project involving structural development or soil disturbance on or adjacent to sites listed on, or eligible to be listed on the National Register of Historic Places, as determined by the CEO or Planning Board shall be submitted by the applicant to the Maine Historic Preservation Commission for review and comment at least thirty (30) days prior to action being taken by the Planning Board. The Planning Board shall consider comments received from the Maine Historic Preservation Commission prior to rendering a decision on the application.

SECTION 5.7 FINAL PLAN FOR MAJOR SUBDIVISION [AMENDED 6/19/21;4/30/22; 6/17/24]

A. **Procedure**.

1. Within six (6) months after the approval of the preliminary plan, the applicant shall submit an applicationfor approval of the final plan at least thirty (30) days prior to a scheduled meeting of the Planning Board. Applications shall be submitted to the Planning Board in care of the CEO. If the application for thefinal plan is not submitted within six (6) months after preliminary plan approval, the Planning Board shallrequire resubmission of the preliminary plan, except as stipulated below. The final plan shall approximate the layout shown on the preliminary plan, plus any changes required by the Planning Board.

2. If an applicant cannot submit the final plan within 6 months, due to delays caused by other regulatory bodies, or other reasons, the applicant may request an extension. Such a request for anextension to the filing deadline shall be filed, in writing, with the Planning Board prior to the expiration of the filing period. The request for an extension shall state the reason for the delay andset forth a timetable for final plan submission. In considering the request for an extension the Planning Board shall make findings that the applicant has made due progress in preparation

of thefinal plan and in pursuing approval of the plans before other agencies, and that town ordinances orregulations which may impact on the proposed development have not been amended.

3. **Other Approvals:** Prior to submittal of the final plan application, the following approvals shall be obtained in writing, where applicable:

   a. Maine Department of Environmental Protection, under the Site Location of Development Act,Natural Resources Protection Act, or if a wastewater discharge license is needed.

   b. Maine Department of Human Services, if the applicant proposes to provide a centrally managed watersystem.

   c. Maine Department of Human Services, if an engineered subsurface wastewater disposalsystem(s) or advanced waste water treatment system is to be utilized.

   d. U.S. Army Corps of Engineers, if a permit under Section 404 of the Clean Water Act is required.

   e. Maine State Fire Marshall's Office, as appropriate.

   f. Any other approvals required by local, state or federal law.

4. The applicant, or his duly authorized representative, shall attend the meeting of the Planning Boardto discuss the final plan. At the meeting at which an application for final plan approval of a major subdivision is initially presented, the Planning Board shall issue a dated receipt to the applicant.

5. **Determination of a Complete Application:** Within thirty (30) days of the receipt of the final plan application, the Planning Board shall determine whether the application is complete and notify theapplicant in writing of its determination. If the application is not complete, the Board shall notify theapplicant of the specific additional material needed to complete the application.

6. **Public Hearing:** Upon a determination that a complete application has been submitted for review,the Planning Board may decide a public hearing is necessary. The hearing shall be held within thirty (30) days of finding the application complete, or at the next regularly scheduled Board meeting, after the Board's determination it has received a complete application, whichever occurs first. The CEO will publish the notice of the date, time, and place of the hearing in a newspaper of general circulation in the town & town website, the date of the- publication to be at least seven (7) days prior to the hearing. The applicant shall notify all property owners within five hundred (500) ft of the parcel on which a proposed development is located at least fourteen (14) days prior to the meeting at which the application is to be considered. The notice shall include an accurate description of the project, date, time & location of the public hearing and the availability of the application for review via certified mail. The Applicant must contact the CEO for abutter list thirty (30) days prior to the meeting. Evidence of mailing shall be submitted to the CEO prior to the hearing; provided, however that the failure of any abutting property owner to receive a notice of public hearing shall not necessitate another hearing, nor shall it invalidate any decision of the Planning Board with regard to that particular application.

7. Before the Planning Board grants approval of the final plan, the applicant shall meet the performance guarantee requirements contained in Section 3.8 Performance Guarantees.

8. **Findings of Fact and Decision:** Within thirty (30) days from the public hearing or within sixty (60) days of receiving a complete application, if no hearing is held, or within another time limit

as may be otherwise mutually agreed to by the Planning Board and the applicant, the Planning Board shall make findings of fact, and conclusions relative to the criteria for approval contained in Title 30-A M.R.S. Section 4404, Section 5.12 Subdivision Review Criteria, and the standards of this Ordinance. If the Planning Board finds that all the criteria of the statute and the standards of this Ordinance have been met, they shall approve the final plan. If the Planning Board finds that any ofthe criteria of the statute or the standards of this Ordinance have not been met, the Planning Boardshall either deny the application or approve the application with conditions to ensure all of the standards will be met by the subdivision. The reasons for any conditions shall be stated in the records of the Planning Board.

B. **Submissions:** The Final Plan application shall consist of the following.

1. Completed application form, along with 10 copies of all submission materials, must accompany the subdivision application, plus an electronic copy of all submission materials.

2. Final Plan: The Final Plan shall be submitted in ten (10) copies of one or more maps or drawings, which may be printed or reproduced on paper, with all dimensions shown in feet or decimals of a foot. Two (2) full size plan sets measuring twenty-four (24) by thirty-six (36) inches along with eight (8) reduced size plan sets measuring eleven (11) by seventeen (17) inches. Along with ten (10) paper copies of all required submission materials below, along with one (1) electronic copy of all submission materials.

    a. The final plan set must show all of the information presented on the Preliminary Plan and any amendments thereto suggested or required by the Board.
    b. The plan shall be drawn to a scale of not more than one hundred (100) feet to the inch. Plans for subdivisions containing more than one hundred (100) acres may be drawn at a scale of not more than two hundred (200) feet to the inch provided all necessary detail can easily be read.
    c. If any part of the subdivision is located within the Groundwater Protection Overlay District, a reduced copy of the plan and all accompanying material shall be provided to the Yarmouth Water District no less than 7 days prior tothe meeting.

C. **Submission Requirements**: The application for approval of a Final Subdivision shall include the following information. The Planning Board may require additional information to be submitted, where it finds necessary in order to determine whether the criteria of Title 30-A M.R.S §4404 or Section 5.12 Subdivision Review Criteria, are met.

1. Copies of any approval from outside agencies per section 5.7.A.3.

2. All parcels of land proposed to be dedicated to public use and the conditions of such dedication. Written offers to convey title to the town of all public ways and open spaces shown on the Plan, and copies of agreements or other documents, such as homeowner's association bylaws, showingthe manner in which open spaces and/or facilities to be retained by the developer or lot owners areto be maintained shall be submitted. If any of the open space and/or facilities are to be reserved bythe individual unit owners as common open space, the developer shall be required prior to final subdivision plan approval to incorporate a homeowners' association consisting of the individual unitowners, which incorporation must comply with Section 11.09 Homeowner/Property Owners' Associations. The Planning Board may require written evidence from an attorney that the required documents are legally sufficient to preserve and maintain common open space, recreation land and other common facilities. If proposed streets and/or open spaces or other land is to be offered to the town, written evidence that the Select Board are satisfied with the legal sufficiency of the written

offer to convey title shall be included.

3. A list of construction items along with cost estimates for all off-site and the following on-site improvements, that will be completed by the applicant prior to the sale of lots, and evidence that the applicant has financial commitments or resources to cover these costs.
   a. Site preparation, including but not limited to clearing, grading, excavation, or blasting.
   b. Any public or private streets and associated sidewalks and any sidewalks providing access to the site from existing public or private streets.
   c. Lighting, landscaping, public amenities and utilities in all street rights-of-way and all common areas.
   d. Other public or common area improvements such as recreation or open space elements.

4. If any phasing is proposed for the project, the applicant shall provide a phasing plan that includes the following information:
   a. A map depicting the proposed phases of the project.
   b. Approximate dates for construction start and completion for each phase of the project.
   c. A construction management plan depicting items such as, but not limited to, construction access, material storage and any other information that will help the Planning Board understand the details related to the project's phased construction.

SECTION 5.8 FINAL APPROVAL AND FILING FOR MINOR AND MAJOR SUBDIVISIONS [AMENDED 6/19/21; 6/17/24]

A. No plan shall be approved by the Planning Board as long as the applicant, or any entity in which the applicant has a legal or financial interest, is in violation of the provisions of a previously approved Plan within the town.

B. Upon findings of fact and determination that all standards in Title 30-A M.R.S. Section 4404 Review Criteria, Section 5.12. Subdivision Review Criteria, and these regulations have been met, and upon votingto approve the subdivision, the Planning Board shall sign the final plan. The Planning Board shall specify in writing its findings of facts and reasons for any conditions or denial. The town shall retain one copy of the signed plan as part of its permanent records. Any subdivision not recorded in the Cumberland CountyRegistry of Deeds within 90 days of the date upon which the plan is approved and signed by the PlanningBoard shall become null and void.

C. Phased approvals.
   a. Final Plan approval will be limited to the first phase of the subdivision, with Preliminary Plan approval remaining for subsequent phases. The applicant must receive Final Approval for subsequent phases prior to permits or construction activities in any phases.
   b. Construction activities must proceed in conformance with the approved phasing plan. No construction activities may commence on a phase until prior phases of the plan are complete.
   c. Performance guarantees associated with each phase must be received by the Town prior to construction work associated with that phase.

D. Two (2) full sized paper copies of the approved subdivision plan shall be signed by the Planning Board, one to be recorded at the Cumberland County Registry of Deeds and one for town records. Both plans shall be embossed with the sealof the individual responsible for preparation of the plan.

E. No changes, erasures, modifications, or revisions shall be made in any final plan after approval has been given by the Planning Board and endorsed in writing on the plan, unless the revised final plan is firstsubmitted and the Planning Board approves any modifications, except in accordance with Section 5.9 Revisions to Approved Plans for Minor and Major Plans. The Planning Board shall make findings thatthe revised plan meets the criteria of Title 30-A M.R.S., Section 4404, and Section 5.12

Subdivision Review Criteria, and the other standards of these regulations. In the event that a plan is recorded withoutcomplying with this requirement, it shall be considered null and void, and the Planning Board shall institute proceedings to have the plan stricken from the records of the Cumberland County Registry of Deeds.

F. The approval by the Planning Board of a subdivision plan shall not be deemed to constitute or be evidence of any acceptance by the town of any street, easement, or other open space shown on such plan. When a park, playground, or other recreation area shall have been shown on the plan to be dedicatedto the town, approval of the plan shall not constitute an acceptance by the town of such areas. The PlanningBoard shall require the plan to contain appropriate notes to this effect. The Planning Board may also requirethe filing of a written agreement between the applicant and the Select Board covering future deed and title dedication, and provision for the cost of grading, development, equipment, and maintenance of any such dedicated area.

G. Except in the case of a phased development plan, failure to complete substantial construction of the subdivision within 5 years of the date of approval and signing of the plan shall render the plan null and void. Upon determining that a subdivision's approval has expired under this paragraph, the Planning Boardshall have a notice placed in the Cumberland County Registry of Deeds to that effect.

SECTION 5.9 REVISIONS TO APPROVED PLANS FOR MINOR AND MAJOR SUBDIVISIONS [REVISED 4/30/22; 6/17/24]

A. **Procedure:** An applicant for a revision to a previously approved plan shall, at least thirty (30) days prior to a scheduled meeting of the Planning Board, request to be placed on the Planning Board's agenda. If the revision involves abandonment of the subdivision or the creation of additional lots or dwelling units, the procedures for preliminary plan approval shall be followed. If the revision involves only modifications of theapproved plan, without the creation of additional lots or dwelling units, the procedures for final plan approvalshall be followed. [Amended 6/18/11]

B. **Submissions:** The applicant shall submit a copy of the approved plan as well as ten (10) copies of the proposed revisions. The application shall also include enough supporting information to allow the PlanningBoard to make a determination that the proposed revisions meet the standards of these regulations and the criteria of the statute. The Planning Board is authorized to decide whether it has received adequate supporting information to make this decision. The revised plan shall indicate that it is the revision of a previously approved and recorded plan and shall show the title of the subdivision and the book and page or cabinet and sheet on which the original plan is recorded at the Cumberland County Registry of Deeds.

C. **Scope of Review:** The Planning Board's scope of review shall be limited to those portions of the planthat are proposed to be changed.

D. **Technical Review:** A technical review escrow is required at the time of application to cover the cost of any contract planning services. In addition, the Planning Board may refer the developer to a firm or individual chosen by the Planning Board for legal, technical, or engineering peer review of all submissions. The developer shall pay to the town a sum that the peer reviewer shall budget as sufficient to cover the cost of said review. If afterfinal approval, the sum deposited with the town was more than sufficient to cover the cost, the townshall return the unexpended funds to the developer. If the deposit was not sufficient, the developershall pay the balance to the town prior to final approval by theBoard.

SECTION 5.10 INSPECTIONS AND ENFORCEMENT [AMENDED 6/19/21]

A. **Inspection of Required Improvements**.

1. At least five (5) days prior to commencing construction of required improvements, the developer shall:

    a. Notify the CEO in writing of the time when (s)he proposes to commence construction of suchimprovements, so that the CEO can arrange for inspections to assure that all town specifications, requirements, and conditions of approval are met during the construction of required improvements, and to assure the satisfactory completion of improvements and utilitiesrequired by the Planning Board.

    b. Deposit with the Select Board a check made out to the town of North Yarmouth for the amount recommended by the Town Engineer. These funds shall be used by the town to hire the services of a Maine registered professional engineer to review the specifications for all improvements, and to inspect the construction, including, but not limited to: roads, streets, lighting, sidewalks, storm water facilities, water lines, sewer lines, etc. and all conditions of final approval. If these funds are sufficient to cover the cost of said review and inspection, the remaining funds shall be returned to the developer after satisfactory completionof the improvements, including cleanup. If the funds are not enough to cover said review and inspection, the developer shall submit additional funds to the Town to cover additional inspection escrow.

2. If the inspecting official finds upon inspection of the improvements that any of the required /improvements have not been constructed in accordance with the plans and specifications filed by the developer, he shall so report in writing to the CEO and the developer. The town shall take anysteps necessary to assure compliance with the approved plans.

3. If at any time it appears necessary or desirable to modify the required improvements before or during the construction of the required improvements, the inspecting official is authorized to approve minor modifications due to unforeseen circumstances such as encountering hidden outcrops of bedrock, natural springs, etc. The inspecting official shall issue any approval under thissection in writing and shall transmit a copy of the approval to the CEO and the Planning Board. Revised plans shall be filed with the Planning Board. For major modifications, such as relocation of rights-of-way, property boundaries, changes of grade by more than 1 percent, etc., the subdividershall obtain permission from the Planning Board to modify the plans.

4. At the close of each summer construction season in which the development has occurred, the townshall, at the expense of the developer, have the site inspected by a qualified individual. By October1 of each year during which construction was done on the site, the inspector shall submit a report to the CEO and the Planning Board based on that inspection, addressing whether storm water anderosion control measures (both temporary and permanent) are in place, are properly installed, and appear adequate. The report shall also include a discussion and recommendations on any problems that were encountered.

5. Prior to the sale of any lot, the developer shall provide the Planning Board with a letter from a Maineregistered land surveyor, stating that all monumentation shown on the plan has been installed.

6. Upon completion of road construction and prior to acceptance of the road by the town, (town's Roadway Ordinance), a written certification signed by a Maine registered professional engineer shall be submitted to the Town Manager for Select Board review at the expense of the applicant, certifying that the proposed street meets or exceeds the design and construction requirements of the town's Roadway Ordinance. If there are any underground utilities, the servicing utility shall certify in writing that they have been installed in a manner acceptable to the utility. "As

built" plans shall be submitted to the Select Board.

7. The developer shall be required to maintain all improvements and provide for snow removal on streets and sidewalks until acceptance of the improvements by the town or control is placed with a lot owners' association.

B. **Violations and Enforcement**:

1. No plan of a division of land within the town, which would constitute a subdivision, shall be recordedin the Cumberland County Registry of Deeds until a final plan has been approved by the PlanningBoard in accordance with these regulations.

2. A person shall not convey, offer or agree to convey any land in a subdivision, which has not been approved by the Planning Board and recorded in the Cumberland County Registry of Deeds.

3. A person shall not sell, lease or otherwise convey any land in an approved subdivision, which is not shown, on the plan as a separate lot.

4. No public utility, water district, sanitary district or any utility company of any kind shall serve any lotin a subdivision for which a final plan has not been approved by the Planning Board.

5. Development of a subdivision without Planning Board approval shall be a violation of law. Development includes: cutting of trees, grading or construction of roads; grading of land or lots; orconstruction of buildings; which require a plan, approved as provided in these regulations and recorded in the Cumberland County Registry of Deeds.

6. No lot in a subdivision may be sold, leased, or otherwise conveyed before the road or street uponwhich the lot fronts is completed in accordance with these regulations up to and including the entirefrontage of the lot.

7. Violations of the above provisions of this section are a nuisance and shall be punished in accordance with the provisions of Title 30-A M.R.S., Section 4452, and any other appropriate statutes.

SECTION 5.11 SUBDIVISION REVIEW CRITERIA [AMENDED 6/17/24]

A. **Findings of Fact Required:** Pursuant to Title 30-A M.R.S., Sections 4404 Review Criteria, the Planning Board must make “findings of fact” regarding each of the following criteria before approving a subdivision.

B. **Review Criteria:** The Planning Board shall consider the following criteria and, before granting approval, must determine that:

1. **Pollution:** The proposed subdivision will not result in undue water or air pollution. In making this determination, the Planning Board shall at least consider:

   a. The elevation of land above sea level and its relation to the flood plains;
   b. The nature of soils and subsoils and their ability to adequately support waste disposal;
   c. The slope of the land and its effect on effluents;
   d. The availability of streams for disposal of effluents; and
   e. The applicable state and local health and water resource rules, regulations and/or statutes.

2. **Sufficient Water:** The proposed subdivision has sufficient water available for the reasonablyforeseeable needs of the development;

3. **Municipal Water Supply:** The proposed subdivision will not cause an unreasonable burden on thepublic water supplies of the Yarmouth Water District, if they are to be used;

4. **Erosion:** The proposed development will not cause unreasonable soil erosion or a reduction in thecapacity of the land, both on-site and off-site, to hold water so that a dangerous or unhealthy condition results;

5. **Traffic:** The proposed subdivision will not cause unreasonable highway or public road congestionor unsafe conditions with respect to the use of the highways or public roads existing or proposed and, if the proposed subdivision requires driveways or entrances onto a state or state aid highway,the Department of Transportation has provided documentation indicating that the driveway or roadentrances conform to 23 M.R.S. § 704 and any rules adopted under that section;

6. **Sewage Disposal:** The proposed subdivision will provide for adequate sewage waste disposal andwill not cause an unreasonable burden on municipal services if they are utilized;

7. **Municipal Solid Waste Disposal:** The proposed subdivision will not cause an unreasonableburden on the town's ability to dispose of solid waste, if town services are to be utilized;

8. **Aesthetic, Cultural and Natural Values:** The proposed subdivision will not have an undue adverse effect on the scenic or natural beauty of the area, aesthetics, historic sites, significant plantor animal habitat identified by the Department of Inland Fisheries and Wildlife, U.S. Fish and WildlifeService, Maine Natural Areas Program, Beginning with Habitat Program or the town, or rare and irreplaceable natural areas or any public rights for physical or visual access to the shoreline;

9. **Conformity with Local Ordinances and Plans:** The proposed subdivision conforms to the provisions of this Ordinance and the town's Comprehensive Plan, including the Open Space Plan.In making this determination, the Planning Board may interpret these ordinances and plans;

10. **Financial and Technical Capacity:** The developer has adequate financial and technical capacityto meet the standards of this Ordinance;

11. **Surface Waters:** Whenever situated within 250 feet of the Deer Brook wetland, Knight's Pond, theRoyal River, Chandler Brook, and the East Branch, and whenever situated with 150 feet of ToddyBrook, Pratt's Brook, Deer Brook and an un-named tributary to Chandler Brook, the proposed subdivision will not adversely affect the quality of that body of water or unreasonably affect the shoreline of that body of water.

12. **Groundwater:** The proposed subdivision will not, alone or in conjunction with existing activities, adversely affect the quality or quantity of ground water on site or on adjacent properties, and in particular the quality and quantity of ground water within the Groundwater Protection Overlay District;

13. **Flood areas:** Based on the Federal Emergency Management Agency's Flood Boundary and Floodway Maps and Flood Insurance Rate Maps for North Yarmouth, and information presented by the applicant whether the subdivision is in a flood-prone area. If the subdivision, or any part of it, is in such an area, the subdivider shall determine the 100-year flood elevation and flood

hazard boundaries within the subdivision. The proposed subdivision plan must include a condition of plan approval requiring that principal structures in the subdivision shall not be constructed within the 100-year floodplain;

14. **Wetlands:** All wetlands, including vernal pools, within the proposed subdivision have been identified on any maps submitted as part of the application, regardless of the size of these wetlands. Any mapping of wetlands may be done with the help of the local soil and water conservation district. Wetlands shall be identified in accordance with the 1987 Corps of Engineers Wetland Delineation Manual (or most recent edition), published by the United States Army Corps of Engineers;

15. **Farmland**: All farmland within the proposed subdivision has been identified on maps submitted as part of the application. Any mapping of farmland may be done with the help of the Cumberland County Soil & Water District.

16. **River, Stream or Brook:** Any river, stream or brook within or abutting the proposed subdivision has been identified on any maps submitted as part of the application.

17. **Storm Water:** The proposed subdivision will provide for adequate storm water management;

18. **Impact on Adjoining Municipality:** For any proposed subdivision that crosses municipal boundaries, the proposed subdivision will not cause unreasonable traffic congestion or unsafe conditions with respect to the use of existing public ways in an adjoining municipality in which part of the subdivision is located.

19. **Lands Subject to Liquidation Harvesting:** Timber on the parcel being subdivided has not been harvested in violation of rules adopted pursuant to M.R.S. Title 12, Section 8869, subsection 14. If a violation of rules adopted by the Maine Forest Service to substantially eliminate liquidation harvesting has occurred, the Planning Board must determine prior to granting approval for the subdivision that 5 years have elapsed from the date the landowner (i.e., one person or a group of persons in common or joint ownership) under whose ownership the harvest occurred acquired the parcel. The Planning Board may request technical assistance from the Maine Department of Conservation, Bureau of Forestry to determine whether a rule violation has occurred, or the municipal reviewing authority may accept a determination certified by a forester licensed pursuant to M.R.S. Title 32, chapter 76. If the Planning Board requests technical assistance from the bureau, the bureau shall respond within 5 working days regarding its ability to provide assistance. If the bureau agrees to provide assistance, it shall make a finding and determination as to whether a rule violation has occurred. The bureau shall provide a written copy of its finding and determination to the Planning Board within 30 days of receipt of the Planning Board's request. If the bureau notifies the Planning Board that the bureau will not provide assistance, the Planning Board may require a subdivision applicant to provide a determination certified by a licensed forester.

    For the purposes of this subsection, "liquidation harvesting" has the same meaning as in M.R.S. Title 12, section 8868,[1] subsection 6 and "parcel" means a contiguous area within the town of North Yarmouth owned by one person or a group of persons in common or joint ownership. This subsection takes effect on the effective date of rules adopted pursuant to M.R.S. Title 12, section 8869, subsection 14.'

[1] Liquidation harvesting means the purchase of timberland followed by a harvest that removes most or all commercial value in standing timber, without regard for long-term forest management principles, and the subsequent sale or attempted resale of the harvested land within 5 years (MRSA Title 12 Section 8868, subsection 6)

Questions to assess Subdivision Review Criterion 19 concerning subdivision of liquidated forestland.	Yes/ No	Optional Additional Data	Action
1. Has the parcel changed ownership within 5 years prior to the date of the subdivision application?		Date of last conveyance:	"No" – end of Criterion 19 review "Yes" - Proceed to 2
2. Has timber been harvested on the parcel within 5 years prior to the date of the subdivision application.		Indicate date of last timber harvest:	"No" – end of Criterion 19 review "Yes" - Proceed to question 3
3. Did the timber harvesting result in a rule violation (pursuant to Title 12, section 8869, subsection 14) based on a request for technical assistance from the Department of Conservation, Bureau of Forestry? If Bureau has not agreed to provide assistance proceed to next question.		Date request forwarded to the Maine Forest Service (MFS): Date MFS indicated ability to provide technical assistance:	"No" – end of Criterion 19 review "Yes" - Deny Subdivision
4. Has a violation occurred based on a determination that is certified by a forester licensed pursuant to Title 32, chapter 76? Note: Applicant to obtain this information and provide to the town.		Date of determination by MFS or forester licensed pursuant to Title 32, chapter 76:	"No" – end of Criterion 19 review "Yes" - Deny Subdivision

The following table is designed to assist the Planning Board in making a determination regarding this criterion.

VI. VARIANCES AND APPEALS

SECTION 6.1 APPOINTMENT AND COMPOSITION [AMENDED 6/19/21]

There shall be a Zoning Board of Appeals (ZBA) consisting of five (5) voting members and two (2) alternate members appointed by the Select Board with staggered five (5) year terms. Voting members shall elect a Chairman and Secretary from its membership. An alternate may vote only in the absence of a regular member. The ZBA must be maintained in accordance with the provisions of Title 30-A M.R.S. Section 2691, Board of Appeals.

SECTION 6.2 POWERS AND DUTIES OF THE ZONING BOARD OF APPEALS (ZBA). [AMENDED 5/17/08]

The Zoning Board of Appeals (ZBA) shall conduct of its affairs in accordance with the provisions of this Ordinance and Title 30-A, Section 2691, Board of Appeals, and Section 4353, Zoning Adjustment. The ZBA shall have the following powers:

A. **Administrative Appeals:** To hear and decide administrative appeals, on an appellate basis, where it is alleged by an aggrieved party that there is an error in any order, requirement, decision, or determination made by, or failure to act by, the Planning Board in the administration of this Ordinance; and to hear and decide administrative appeals on a de novo basis where it is alleged by an aggrieved party that there is anerror in any order, requirement, decision or determination made by, or failure to act by, the Code Enforcement Officer in his or her review of and action on a permit application under this Ordinance. Any order, requirement, decision or determination made, or failure to act, in the enforcement of this Ordinanceis not appealable to the Board of Appeals.

B. **Variances:** To grant variances from the terms of this Ordinance provided that there is no substantial departure from the intent of this Ordinance, and that a literal enforcement of the Ordinance would cause undue hardship as defined by 30-A M.R.S. Sec. 4353, Zoning Adjustment. The Board shall limit any variances granted as strictly as possible in order to preserve the terms of the Ordinance and it may imposesuch conditions, as it deems necessary, to that end.

C. **Miscellaneous Appeals:** To hear and decide only the following miscellaneous appeals from the provisions of this Ordinance. In granting, by majority vote, any such miscellaneous appeals, the ZBA mayprescribe conditions and safeguards as are appropriate under this Ordinance.

   1. To interpret District boundaries as prescribed in Section VII. Zoning District Regulations of thisOrdinance.

   2. To permit variations of non-conformance as prescribed in Section II. Non-conformance of thisOrdinance.

SECTION 6.3 ADMINISTRATIVE APPEALS, VARIANCES AND MISCELLANEOUS APPEALS [AMENDED 6/12/10; 6/19/21, 11/08/22]

A. **Procedures**:

   1. **Time Limit:** An administrative, variance or miscellaneous appeal may be taken to the Zoning Boardof Appeals (ZBA) by an aggrieved party from any decision of the Code Enforcement Officer (CEO)or the Planning Board. Such an appeal shall be taken within thirty (30) days of the date of the official written decision appealed from, and not otherwise, except that the ZBA, upon a showing of good cause, may waive the thirty (30) day requirement.

2. **Submission for an Appeal**:

   a. Applications for appeals shall be made by filing with the CEO eleven (11) copies of written notice of appeal that includes:

      1) A concise written statement indicating what relief is requested and why the appeal orvariance should be granted.

      2) A sketch drawn to scale showing lot lines, location of existing buildings and structures andother physical features of the lot pertinent to the relief sought.

      3) The appeal fee to cover the notification requirements.

   b. No appeal shall be placed on the agenda for ZBA consideration or action until the CEO makesa finding that the application is complete. All appeals shall require a publichearing.

3. **Records to be Forwarded to the Zoning Board of Appeals:** Upon receiving an application for an administrative appeal or a variance, the CEO or Planning Board, as appropriate, shall transmitto the ZBA all of the papers constituting the record of the decision appealed from.

4. **Public Hearing:** The Zoning Board of Appeals (ZBA) shall hold a public hearing on an administrative appeal or a request for a variance within 35 days of a complete written application, unless this time period is extended by the parties. The public hearing shall be conducted in accordance with the procedure set forth in 30-A M.R.S., Section 2691, Board of Appeals. The CEO, Planning Board and Select Board may be parties to the hearing. Notification of all appeals shallbe given to the Planning Board, if applicable, and abutting property owners indicating the nature ofthe appeal and the time and place of the public hearing. Failure of any property owner to receive a notice shall not invalidate any action of the ZBA.

5. **Administrative Appeals**:

   a. When the ZBA reviews a decision of the Code Enforcement Officer the Board of Appeals shallhold a “de novo” hearing. At this time the Board may receive and consider new evidence and testimony, be it oral or written. When acting in a “de novo” capacity the ZBA shall hear and decide the matter afresh, undertaking its own independent analysis of evidence and the law, and reaching its own decision.

   b. When the ZBA hears a decision of the Planning Board, it shall hold an appellate hearing, and may reverse the decision of the Planning Board only upon finding that the decision was contraryto specific provisions of the Ordinance or contrary to the facts presented to the Planning Board.The ZBA may only review the record of the proceedings before the Planning Board. The ZBA shall not receive or consider any evidence which was not presented to the Planning Board, butthe ZBA may receive and consider written or oral arguments. If the ZBA determines that the record of the Planning Board proceedings are inadequate, the ZBA may remand the matter to the Planning Board for additional fact finding.

6. **Decision by Zoning Board of Appeals (ZBA)**:

   a. **Quorum:** A majority of the full voting membership of the ZBA shall constitute a quorum for thepurpose of deciding an appeal.

   b. **Burden of Proof:** The person filing the appeal shall have the burden of proof.

   c. **Action on Appeal:** Following the public hearing on an appeal, the ZBA may affirm, affirm

with conditions, or reverse the decision of the CEO or Planning Board. The ZBA may reverse the decision, or failure to act, of the CEO or Planning Board only upon a finding that the decision, or failure to act, was clearly contrary to specific provisions of this Ordinance. When errors of administrative procedures or interpretations are found, the case shall be remanded back to the CEO or the Planning Board for correction.

d. **Time Frame:** The ZBA shall decide all administrative appeals and variance appeals within 35 days after the close of the hearing, and shall issue a written decision on all appeals.

e. **Statement of Findings:** The ZBA shall state the reasons and basis for its decision, including a statement of the facts found and conclusions reached by the Board. The ZBA shall cause written notice of its decision to be mailed or hand-delivered to the applicant, and to the Department of Environmental Protection for appeals applicable to the Resource Protection andResidential Shoreland Districts, within 7 days of the Board's decision. Copies of written decisions of the ZBA shall be given to the Planning Board, Code Enforcement Officer, and the Select Board.

7. **Appeal to Superior Court:** Except as provided by 30-A M.R.S. Section 2691(3)(F), any aggrieved party who participated as a party during the proceedings before the ZBA may take an appeal to Superior Court in accordance with State laws within forty-five (45) days from the date of the vote onthe original decision of the ZBA.

8. **Reconsideration:** In accordance with 30-A M.R.S. Section 2691(3)(F), the ZBA may reconsider any decision reached under this section within forty-five (45) days of its prior decision. A request to the ZBA to reconsider a decision must be filed within 10 days of the decision that is being reconsidered. A vote to reconsider and the action taken on that reconsideration must occur and be completed withinforty-five (45) of the date of the vote on the original decision. Reconsideration of a decision shall requirea positive vote of the majority of the ZBA members originally voting on the decision, and proper notification to the landowners, petitioner, Planning Board, CEO, and other parties of interest, including abutters and those who testified at the original hearing(s). The ZBA may conduct additional hearings and receive additional evidence and testimony. Appeal of a reconsidered decision to Superior Court must be made within 15 days after the decision on reconsideration.

B. **Variance Appeals:** The Zoning Board of Appeals (ZBA) shall limit any variances granted as strictly as possible in order to ensure conformance with the purposes and provisions of this Ordinance to the greatest extent possible, and in doing so may impose such conditions to a variance as it deems necessary. The party receiving the variance shall comply with any conditions imposed. Variances may be granted only under the following conditions:

1. **Variances may be permitted only under the following conditions**:

a. Variances may be granted only from dimensional requirements including, but not limited to street frontage, lot width, structure height, percent of lot coverage, and setback requirements.

b. Variances shall not be granted for establishment of any uses otherwise prohibited by thisOrdinance.

c. The Board shall not grant a variance unless it finds that:

1) The proposed structure or use would meet the provisions of this Ordinance, except for the specific provision which has created the non-conformity and from which relief is sought; and
2) The strict application of the terms of this Ordinance would result in undue hardship.

Theterm "undue hardship" shall mean:

(a) That the land in question cannot yield a reasonable return unless a variance is granted;

(b) That the need for a variance is due to the unique circumstances of the property and notto the general conditions in the neighborhood;

(c) That the granting of a variance will not alter the essential character of the locality; and

(d) That the hardship is not the result of action taken by the applicant or a prior owner.

2. **Setback Variance for a Detached Single-Family Dwelling**: Notwithstanding subsection B.1. c.2. above, the ZBA may grant a setback variance for a detached single-family dwelling when strictapplication of this Ordinance to the applicant and the applicant's property would cause undue hardship. The term "undue hardship" as used in this subsection means:

   a. The need for a variance is due to the unique circumstances of the property and not to thegeneral conditions of the neighborhood;

   b. The granting of a variance will not alter the essential character of the locality;

   c. The hardship is not the result of action taken by the applicant or a prior owner;

   d. The granting of the variance will not substantially reduce or impair the use of abutting property;and

   e. The granting of a variance is based upon demonstrated need, not convenience, and no otherfeasible alternative is available.

   Under this subsection, the ZBA may only grant a variance from a setback requirement for a singlefamily dwelling that is the primary year-round residence of the applicant. A variance under this subsection may not exceed 20 percent of a set-back requirement and may not be granted if the variance would cause the area of the dwelling to exceed the maximum permissible lot coverage, provided, however, a variance under this subsection may exceed 20 percent of set-back requirement, except for maximum setbacks from a wetland or water body required within the Residential Shoreland District and the Resource Protection District pursuant to Section 9.1. Residential Shoreland District and the Resource Protection District Performance Standards (subsection G. Principal and Accessory Structures), if the applicant has obtained the written consent of an affected abutting landowner.

3. **Disability Variance:** Notwithstanding subsection B.1.c.1). above, the ZBA may grant a variance toan owner of a residential dwelling for the purpose of making that dwelling accessible to a person with a disability who resides in or regularly uses the dwelling. The ZBA shall restrict any variance granted under this subsection solely to the installation of equipment or the construction of structuresnecessary for access to or egress from the dwelling by the person with the disability. The ZBA mayimpose conditions on the variance, including limiting the variance to the duration of the disability orto the time that the person with the disability lives in the dwelling. For the purposes of this subsection, a disability has the same meaning as a "physical or mental disability" under 5 M.R.S. § 4553(7-A), and the term "structures necessary for access to or egress from the dwelling" shall include railing,ramps, wall or roof systems necessary for the safety or effectiveness of the structure.

4. **Conditions for Variances:** In hearing variances under this, the ZBA shall determine whether the appellant's proposal will satisfy the following criteria, and in granting any variance it may impose such conditions as it deems necessary to assure compliance with the applicable requirements setforth in subsections 1, 2 and 3., above, and with the following criteria:

   a. The proposal must include any special screening, fencing, or other buffer necessary to set off the subject property from abutting uses or to assure the continued enjoyment of abutting uses;

   b. The proposal must adequately provide for drainage through and for preservation of existing topography within its location, particularly in minimizing any cut, fill, or paving intended;

   c. The proposal must not create or increase any fire hazard or any hazards to safe, convenient pedestrian or vehicular flow;

   d. The proposal must prevent or avoid the creation of any nuisance affecting adjacent properties;

   e. The proposal must include provision for adequate, lawful sewage disposal and healthful domestic water supplies;

   f. The proposal should not have a significantly adverse effect on adjacent or nearby property values;

   g. The appellant must be found to have adequate financial and technical capacity to satisfy the foregoing criteria and to develop and thereafter maintain the proposed project or use in accordance with all applicable requirements.

5. **Mandatory Shoreland Zoning Requirement:** This requirement is applicable to areas subject to the Mandatory Shoreland Zoning Act (Residential Shoreland District and Resource Protection District). A copy of each variance request, including the application and all supporting information supplied by the applicant, shall be forwarded by the CEO to the Commissioner of the Department of Environmental Protection at least 20 days prior to action by the ZBA. Any comments received from the Commissioner prior to action taken by the ZBA shall be made a part of the record and shall be taken into consideration by the ZBA.

6. **Recording of Variances at Registry of Deeds:** If a variance is granted under this section, a certificate indicating the name of the current property owner, identifying the property by reference to the last recorded deed in its chain of title and indicating the fact that a variance including any conditions on the variance, has been granted and the date of the granting, shall be prepared in recordable form. The certificate must be recorded in the Cumberland County Registry of Deeds within 90 days of the final approval of the variance or the variance is void. The variance is not validuntil recorded as provided in this provision. For purposes of this subsection, the date of the final written approval shall be the date stated on the written approval. It is the applicant’s responsibility to obtain a Variance Certificate from the CEO, and to record this Certificate at the Cumberland County Registry of Deeds.

7. **Expiration of Variances:** Notwithstanding the recording of a certificate of variance, the applicant’slegal rights set forth in a variance shall expire if the construction, alteration or action contemplatedby the variance, if any is not substantially completed within one year from the date on which the ZBA voted to grant the variance(s). [Amended 6/18/11]

VII. ZONING DISTRICT REGULATIONS

SECTION 7.1 ESTABLISHMENT OF DISTRICTS

A. **Land Use Districts:** To implement the provisions of this Ordinance, the town is hereby divided into the following zoning districts:

1. Village Center District
2. Village Residential District
3. Farm and Forest District
4. Residential Shoreland District
5. Resource Protection District

B. **Overlay Districts:** To further implement the provisions of this Ordinance, the town is hereby divided into overlay districts. The provisions of overlay districts will be in addition to those of the above underlying districts. Whenever the requirements of the Overlay Districts differ from the requirements of the underlying district, the most restrictive, or those imposing the higher standards, shall govern. The overlay districts are as follows:

1. Groundwater Protection Overlay District
2. Royal River Corridor Overlay District

SECTION 7.2 ZONING MAP AND LOCATIONS OF DISTRICTS

The zoning districts are defined as shown on the official map entitled “Town of North Yarmouth Zoning Map”, as may be amended from time to time. The Town of North Yarmouth Zoning Map (Zoning Map) shall be certified by the attested signature of the Town Clerk and shall be kept on file by the Town Clerk. The Town of North Yarmouth Zoning Map is hereby made part of this Ordinance.

A. **Location of District Boundaries:** The boundaries of the zoning districts are as shown on the Zoning Map. Where the Zoning Map shows zoning district boundary lines as following railroads, utility lines or public or privateroads or ways, the centerlines of such roads or ways shall be the boundary lines. Where district boundary linesare shown approximately on the location of existing property lines or lot lines and the exact location of the boundaries of the district is not indicated by means of figures, distances or otherwise described, the property orlot lines shall be the district boundary lines. Where district boundary lines are shown upon the Zoning Map outside of road lines and approximately parallel thereto, they shall be considered to be parallel to such roads. Figures on the Zoning Map between district boundary lines and the nearest road lines indicate the measurement betweenthe same at right angles to the road lines unless otherwise specified. The boundaries of the Groundwater Protection Overlay District that do not follow town lines, utility lines, or railroads are the boundaries of the surfacewater watersheds to the existing and future wellheads of public water supplies, as shown on the Zoning Map. Incases in which the location of boundaries is not defined by detailed description at the time of enactment, such locations shall be determined by the distances in feet, when given upon the Map. When distances are not givenupon the Map, such locations shall be determined by the scale of the map. Where uncertainty exists as to the location of any zoning district boundary, the property owner so affected may request, in writing, that the Code Enforcement Officer (CEO) make a formal, written determination. If the property owner does not agree with the CEO’s determination, the property owner may appeal this decision to the Zoning Board of Appeals as an administrative appeal in accordance with Section VI. Variances and Appeals.

B. **Location of Resource Protection District, Residential Shoreland District, Royal River Corridor OverlayDistrict, Groundwater Protection Overlay District and the FEMA 100-year Floodplain Boundaries:** Whereuncertainty exists as to the exact location of a Resource Protection District, a Residential Shoreland District, a Royal River Corridor Overlay District, a Groundwater Protection Overlay District, or the boundary of the FEMA 100-year floodplain (most recent mapping), the following procedures shall be used to reach an official determination of the location:

1. Upon written request by a property owner, town board or a town staff person, the CEO shall determine, in writing, the location of the district boundaries based on the Zoning Map, this Ordinance, Yarmouth Water District or other experts, documents cited in this Ordinance and similar materials and on-site field verification, as applicable. If a requesting property owner believes that an initial determination by the CEOis in error or if reasonable doubt exists regarding the existence, classification or location of the district, the property owner may submit information on soils, vegetation or other pertinent information, and request a meeting with the CEO to reconsider the determination. If the property owner does not concur with the reconsidered determination, the CEO shall refer the issue to the Planning Board for its review and determination, to be made with the advice of the Yarmouth Water District, or other experts, as appropriate.

2. If an applicant disputes the determination of the boundaries or the Resource Protection District, the Residential Shoreland District, the Royal River Corridor Overlay District, the Groundwater Protection Overlay District and/or the FEMA 100-year floodplain, or if the CEO concludes that the location of the boundary is in doubt, the applicant shall submit the following information, as applicable, to the Planning Board, unless otherwise waived by the Planning Board:

    a. A site plan map showing the proposed use, structure or activity including a map at a scale of one inch equals fifty feet (1”=50’), including the boundaries of the Resource Protection District, the Residential Shoreland District, the Royal River Corridor Overlay District, the Ground Water Protection Overlay District and/or the 100-year floodplain scaled from the ZoningMap;

    b. A topographic map showing the location and slopes for all grades within the site, by not greater than2-foot contours;

    c. For wetlands, a high intensity soils map showing the wetland upland edge for the site as defined by wetland soils, and a description of the vegetative cover of the site, including dominant species and the location of the wetland upper edge for the site based on vegetation.

    d. For 100-year floodplain areas, written certification as to the location of the 100-year floodplain boundary to include a map of the 100-year floodplain boundary overlaid onto a USGS Quadrangle Map or other topographic map by a professional land surveyor, registered professional engineer or architect. The determination shall be based on engineering practices recognized by the Federal Emergency Management Agency (FEMA) and the provisions of the town’s Floodplain Management Ordinance, including the most recent FEMA maps for the town. All proposals include base flood elevations, flood boundaries, and, in a riverine 100-year floodplain, floodway data. These determinations shall be based on engineering practices recognized by the Federal Emergency Management Agency.

e. A statement, supported by necessary documentation, explaining why the site is not within a ResourceProtection District, Residential Shoreland District, Royal River Corridor Overlay District, Groundwater Protection Overlay District or FEMA 100-year floodplain as defined herein; and

f. Additional information deemed necessary by the Planning Board.

3. In determining the existence and boundaries of particular wetland areas, district boundaries and buffer areas, the CEO or the Planning Board may request the Yarmouth Water District, or other expert to inspectthe site and submit recommendations in writing.

4. In evaluating wetland, 100-year floodplain, shoreland or groundwater overlay boundaries, the CEO, Planning Board may consult with expert persons or agencies.

5. In all cases, the burden of proof shall be on the applicant to show that the site in question is not within a Resource Protection District, Residential Shoreland District, Royal River Corridor Overlay District, Groundwater Protection Overlay District or FEMA 100-year floodplain.

C. **Lots in Two or More Districts:** Where a district boundary line as established in this Ordinance and as shownon the Zoning Map divides a lot which existed at the time of enactment of this Ordinance, the use and other requirements applying to the less restricted portion of such lot under this Ordinance may be extended not morethan 50 feet beyond the district boundary line into the lot in the more restricted district. If any portion of the lot islocated within the Groundwater Protection Overlay District, the Royal River Corridor Overlay District, the Residential Shoreland District, the Resource Protection District and/or the FEMA 100-year floodplain each portion of the lot shall be governed by the zoning district regulations in which it is located.

SECTION 7.3 DISTRICT PURPOSES [AMENDED 5/17/08]

A. **Village Center District:** The Village Center District is the civic and cultural core of the community, consistingof village scale, mixed uses and residential neighborhoods. The density and intensity of uses should reflect the ability of the soils to provide for waste disposal, based on available technology, until centralized sewer becomes available. This district is to be attractive, well maintained and highly desirable for residential living and the development of compatible nonresidential uses that provide convenient access to goods and services. This district should be pedestrian friendly, with public space for community interaction. Natural vegetation, supplemented with plantings, should provide privacy, improve aesthetics, minimize noise, and otherwiseenhance the environment. Design and performance standards include provisions to buffer residential uses fromany potential undesirable effects of nonresidential uses. Dimensional standards should be flexible to allow for creative development designs consistent with the existing village character. New village uses should be sensitiveto the existing historic character, topography and natural resources of the area. Open space and passive recreational areas should be within walking distance of all areas of the district. New development is most desirable with frontage on roads off the main thoroughfares, so that curb cuts are kept to a minimum along Routes 9, 115 and 231. One of the primary purposes of the Village Center District is to encourage build- out in this district prior to more intensive development of the Village Residential District.

B. **Village Residential District:** Village Residential Districts allow for future expansion of the historic pattern and character of the Village Center District, to include medium density residential neighborhoods and small scale, low intensity nonresidential uses, such as corner grocery and convenience stores. The density and intensity of uses should reflect the ability of the soils to provide for waste disposal, based on available technology, until centralized sewer becomes available. The Village Residential District should be similar to the Village Center District, but should reflect a desire

to have less commercial and industrial development. Dimensional standardsshould be designed to encourage the development of backland served by internal roads or streets, and discourage individual curb cuts off state highways.

C. **Reserved (Transitional Residential District):** *Explanatory Note – As of the adoption of this Ordinance on June 14, 2005, Transitional Residential Districts are not a part of this Ordinance. The Comprehensive Plan recommends that Transitional Residential Districts be established in areas adjacent to Yarmouth along Sligo Road and North Road after the town of Yarmouth zones adjacent areas for growth or after sewer becomes readily available to these areas. These districts are designed to allow for orderly expansion of development from the town of Yarmouth into North Yarmouth.*

D. **Farm And Forest District:** The Farm and Forest District is designed to preserve rural character with low- density development and minimal impact on public roads and services, thereby conserving open space, forest and farmland, water resources, wildlife habitat and high priority open spaces, such as the Royal River corridor, Pratt's Brook corridor, and the Deer Brook – Knight's Pond area. This District allows low-density residential usesand provides areas for resource-based land uses, such as forestry, agriculture and low-intensity outdoor recreation. Conservation and/or cluster subdivisions that preserve at least 50 percent of the land in open spaceare required. Home occupations and other compatible, low-intensity nonresidential uses are permitted, but must be designed to be consistent with the purposes of this district. Land uses that generate considerable trafficor require access to public services or facilities are restricted. Access management and preservation of rural scenic character is maintained through site distance requirements, curb cut limitations, screening and preservation of natural buffers along state and town roads. The rate of new residential construction shall be limited in these areas.

E. **Residential Shoreland District:** The Residential Shoreland District includes those shoreland areas suitablefor residential and recreational development. As a shoreland district, this district must also further the maintenance of safe and healthful conditions; prevent and control water pollution; protect fish spawning grounds,aquatic life, bird and other wildlife habitat; protect buildings and lands from flooding and accelerated erosion; protect archaeological and historic resources; protect wetlands; control building sites, placement of structures and land uses; conserve shore cover, and visual as well as actual points of access to bodies of water; conservenatural beauty and open space; and anticipate and respond to the impacts of development in shoreland areas. This district is established in accordance with the provisions of 38 M.R.S. Section 435 et seq. (Maine Mandatory Shoreland Zoning Act). This district includes areas within 250 feet, horizontal distance, of the upland edge of the Deer Brook wetland and Knight's Pond that are not included in the Resource Protection District as displayed on the Zoning Map.

F. **Natural Resource Protection District:** The Natural Resource Protection District provides the highest level of protection in areas where development would adversely affect water quality, productive habitat, biological ecosystems, or scenic and natural values when associated with wetlands and shorelands. As a shoreland district,this district shall further the maintenance of safe and healthful conditions; prevent and control water pollution; protect fish spawning grounds, aquatic life, bird and other wildlife habitat; protect buildings and lands from flooding and accelerated erosion; protect archaeological and historic resources; protect wetlands; control buildingsites, placement of structures and land uses; conserve shore cover, and visual as well as actual points of accessto bodies of water; conserve natural beauty and open space; and anticipate and respond to the impacts of development in shoreland areas. This district is established in accordance with the provisions of 38 M.R.S. Section 435 et seq. (Maine Mandatory Shoreland Zoning Act). The Natural Resource Protection Districtshall include:

1. Areas within 250 feet, horizontal distance, of the normal high-water line of the Royal River, ChandlerBrook and the East Branch;

2. Areas within 150 feet, horizontal distance, of the normal high-water line of Deer Brook, Toddy Brook,Pratt's Brook and an unnamed tributary to Chandler Brook;

3. Areas within 150 feet, horizontal distance, of the upland edge of Knight's Pond and the Deer Brookwetland.

G. **Royal River Corridor Overlay District:** The Royal River Corridor Overlay District includes land areas within500 feet on either side of the Royal River, Chandler Brook and the East Branch. The Royal River Corridor OverlayDistrict is designed to provide additional standards to preserve the Royal River corridor, the Chandler Brook corridor and the East Branch corridor as greenways in open space uses. The purpose of the Royal River CorridorOverlay District is to preserve open space and conserve natural beauty; protect wildlife habitat and corridors; protect water quality; protect archaeological and historic resources; provide passive recreational corridors; control building sites and placement of structures and land uses; and anticipate and respond to the impacts of development in the river and stream corridors.

H. **Groundwater Protection Overlay District:** The Groundwater Protection Overlay District is designed to maintain and preserve critical groundwater resources associated with existing and future public and private watersupplies, including wellhead protection areas for Yarmouth Water District wells. The protection of groundwater is critical to promoting the health, safety and general welfare of the residents of North Yarmouth and other usersof the public water supplies.

SECTION 7.4 DISTRICT LAND USE TABLE [AMENDED 6/19/21]

A. **General:** All land use activities shall conform to the use, development, and performance and design standards of the district(s) in which such use is located and all standards identified in Section XI Standards for Specific Activities. The following Table 7-1. Land Uses by District identifieswhich uses of land, buildings, or structures are permitted by right, permitted subject to review, and/or permitted subject to the issuance of a conditional use permit in the various districts. Throughout this Ordinance referenceis made to Table 7-1. in which allowed uses, permitted uses, conditional uses and prohibited uses are organizedby categories of use such as "residential uses" or "institutional uses." These headings or categories shall carry no legal meaning, but rather serve only for organizational purposes.

B. **Overlay Districts:** In order to be permitted in an overlay district (Groundwater Protection Overlay District, Royal River Corridor Overlay District), a use must be listed and approved, as applicable, as an allowed (A), permitted (P, SPR), and/or conditional use (CU/SPR) in both the overlay district and the underlying district. If theuse is prohibited (N) in either the overlay district or the underlying district it is a prohibited use. Where there is adiscrepancy between the requirements of the overlay district and the underlying district, the more restrictive requirement or provision applies.

C. **Accessory Uses and Structures:** Any accessory structure or use shall require a permit from the same permitting authority as would be required for the principal use or structure in accordance with Table 7-1 except as follows:

The Code Enforcement Officer may permit an accessory structure of up to 600 square feet in size in either the Royal River Corridor Overlay District or the Ground Water Protection Overlay District using the same criteria andstandards as if the review were conducted by the Planning Board. [Amended 6/28/11]

For example, a swimming pool (an accessory use) associated with a single-family residence (the principal use)would require a permit from the CEO in the Village Center District. No permit is required if a shed is less than 200 sq. ft. in total area and has a height less than 15 feet.

TABLE 7-1 LAND USES BY DISTRICT KEY

A = **Allowed Uses (A):** Allowed Uses do not generally require review by the Code Enforcement Officer ora town board. However, some activities associated with allowed uses require permits, such as new driveways, signs, subsurface waste disposal systems, etc. (See Table 7-1). Allowed uses must also conform, as applicable, to the provisions of this Ordinance, including Section III. Administration and Enforcement, Section VII. General Requirements Applicable to All Land Uses, and Section IX. Special District Standards (Groundwater Protection Overlay District, Residential Shoreland District and Resource Protection District Provisions)

P = **Permitted Uses Requiring a Permit from the Code Enforcement Officer:** Uses displayed in Table 7-1. as being Permitted Uses (P) shall require approval from the Code Enforcement Officer in accordance with the provisions of this Ordinance, including, but not limited to, Section VIII. General Requirements Applicable to All Land Uses, and Section IX. Special District Standards (Groundwater Protection Overlay District, Residential Shoreland District, Resource Protection District Provisions, Royal River Corridor Overlay District)

SPR = **Site Plan Review Permit Required from the Planning Board:** Uses displayed in Table 7-1. as requiring Site Plan Review (SPR) shall require approval from the Planning Board in accordance with the provisions Section IV. Site Plan Review and Conditional Uses and the other applicable provision of this Ordinance.

CU/SPR = **Conditional Use Permit and Site Plan Review Permit Required from the Planning Board:** Uses displayed in Table 7-1. as Conditional Uses (CU/SPR) shall require approval from the Planning Board in accordance with the provisions of Section IV. Site Plan Review and Conditional Uses and the other applicable provision of this Ordinance.

N = **Prohibited Use**

Footnotes Key –

(1) Includes Community Living Arrangements. See Section X11. Definitions for more information.
(2) Single-family residential structures may be allowed by special exception only according to the provisions of Section 7.5 Special Exceptions. Two family residential structures are prohibited.
(3) Manufactured Housing shall meet the requirements of Section 11.5 Manufactured Housing on Individual Lots.
(4) Accessory dwelling units shall meet the requirements of Section 11.1 Accessory Dwelling Units.
(5) Home occupations shall meet the requirements of Section 11.4 Home Occupations.
(6) Home Heating Fuel Tanks & Fuel Storage shall meet the requirements of Section 10.12.C. Home Heating Fuel Tanks & Fuel Storage.
(7) Signs, exterior displays and any other indications of a home-based occupation in a residential zone shall meet the requirements of Section 10.7. B.11.
(8) See Section 10.4 for permitted building types in the Residential Shoreland District.
(9) See Section 9.1 for additional restrictions in the Resource Protection District and Residential Shoreland District.
(10) See Section 12 Definitions for additional information related to Essential Services
(11) See Section 12 Definitions and Section 9.1.P. for additional information related to Service Drops.
(12) Nursing Homes/Congregate Care must be served by sewer or advanced wastewater treatment systems for on-site sewage disposal.
(13) Refer to Section 12 Definitions for additional information related to Cemeteries.
(14) Clubhouses are prohibited in the Resource Protection District.
(15) Piers/Docks/Wharfs/Bridges - Permanent are allowed via Planning Board approval & Piers/Docks/Wharfs/Bridges – Temporary are allowed via CEO approval, excluding bridges and other crossings not involving earth work, in which case no permit is required [Amended 5/17/08].
(16) Refer to Section 12 Definitions for additional information related to Agriculture.
(17) Permit required when timber harvest consists of more than 5 acres (this includes transportation or utility corridors).
(18) Abandoned wells must be filled with inert material; See Section 9.2.H. Groundwater Protection Overlay District; Best Management Practices for additional information.
(19) No more than 660 gallons of liquid fuel per parcel of land may be stored on-site for a Private Airstrip. Also see Section 10.12 Hazardous, Special, and Radioactive Materials.
(20) Refer to Section 9.1.K. Residential Shoreland District and Resource Protection District Performance Standards: Parking Areas for additional information related to parking associated with single-family dwellings, two-family dwellings and non-commercial farmstands.
(21) Except as provided in Section 9.1.L. Residential Shoreland District and Resource Protection District Performance Standards: Roads and Driveways [Amended 5/17/08] for additional information related to road and driveway construction.

TABLE 7.1 LAND USES BY ZONING DISTRICT [AMENDED 5/17/08,[1] 6/19/21, 06/17/23; 6/17/24]							
A = Allowed Use; P = Permitted Use (CEO Review); SPR = Site Plan Review (Planning Board Review) CU = Conditional Use (Planning Board Review); N = Prohibited Use							
USES* **	**Village Center**	**Village Residential**	**Farm and Forest**	**Resource Protection[9]**	**Residential Shoreland[9]**	**Royal River Overlay***	**Groundwater Overlay***
Residential Uses							
Single-family detached dwelling[1]	P	P	P	N	P	SPR	P
Duplex	P	P	P	N	P	SPR	P
Manufactured housing - individual lot[3]	P	P	P	N	P	SPR	P
Conversions - seasonal to year-round residences	P	P	P	N	P	SPR	P
Mobile Home Park	CU/SPR	SPR	N	N	N	N	N
Multiple Multifamily dwelling units in a permitted Building Type	SPR	N	N	N	N	N	SPR
Accessory Dwelling Unit[4] [Amended 5/17/08]	P	P	P	N	P	P	P
Accessory use – Home Occupation[5]	P	P	P	N	SPR	SPR	SPR
Home heating fuel tanks & fuel storage (greater than 660 gallons of liquid fuel[6] per parcel of land)	SPR	SPR	SPR	N	N	N	N
Accessory use – Home Based Occupation[7] [Amended 5/30/09]	P	P	P	N	N	SPR	SPR
Commercial and Industrial Uses							
Beauty salons	SPR	CU/SPR	N	N	N	N	CU/SPR
Bed and breakfast	SPR	SPR	SPR**	N	N	N	SPR
Boat builders and refinishers	SPR	N	N	N	N	N	N
Business/professional office less than 2,000 sq.ft. gross floor area	SPR	SPR	CU/SPR**	N	N	N	SPR
Business/professional office, 2,000 to 10,000 sq.ft. gross floor area	SPR	N	N	N	N	N	SPR
Retail sales/services, less than 2,000 sq.ft. gross floor area	SPR	SPR	N	N	N	N	SPR
Retail sales/services, 2,000 to 10,000 sq.ft. gross floor area	SPR	N	N	N	N	N	CU/SPR

Notes: *Overlay Districts are regulations and standards in addition to those of the underlying district. Where there is a discrepancy, the more restrictive provision applies. All uses, including "Allowed Uses" must comply with the Overlay District Performance Standards. The Royal River Corridor Overlay District includes the Royal River, Chandler Brook and the East Branch.

**Can only be conversions of buildings in existence as of June 14, 2005

.*** For all Land Use definitions please refer to section XII Definitions

TABLE 7.1 LAND USES BY ZONING DISTRICT (continued from prior page) A = Allowed Use; P = Permitted Use (CEO Review); SPR = Site Plan Review (Planning Board Review) CU = Conditional Use (Planning Board Review); N = Prohibited Use							
USES* **	**Village Center**	**Village Residential**	**Farm and Forest**	**Resource Protection[9]**	**Residential Shoreland[9]**	**Royal River Overlay***	**Groundwater Overlay***
Commercial and Industrial Uses (continued)							
Retail sales/services with 10,000 sq.ft. gross floor area, or more	N	N	N	N	N	N	N
Restaurants with less than 2,000 sq.ft. gross floor area	SPR	SPR	CU/SPR **	N	N	N	SPR
Restaurants with 2,000 sq.ft. gross floor area, or more	SPR	SPR	CU/SPR**	N	N	N	CU/SPR
Tavern	CU/SPR	CU/SPR	CU/SPR	N	N	N	CU/SPR
Small Brewery, Small Winery, Small Distillery	CU/SPR	CU/SPR	CU/SPR	N	N	N	CU/SPR
Assembly Venue	SPR	SPR	SPR	N	N	CU/SPR	CU/SPR
Farm Stand	A	A	A	N	N	A	A
Takeout eating place	SPR	SPR	N	N	N	N	SPR
Drive-through eating place	N	N	N	N	N	N	N
Redemption center less than 2,000 sq. ft. gross floor area	SPR	N	N	N	N	N	N
Commercial food processors, other than those where food is raised on the premises (see Natural Resource Based Uses)	SPR	SPR	SPR	N	N	N	N
Financial institution	SPR	N	N	N	N	N	SPR
Financial institution with drive through	CU/SPR	N	N	N	N	N	CU/SPR
Laundromat	SPR	N	N	N	N	N	SPR
Dry cleaners' drop-off, no dry cleaning - processing	SPR	SPR	N	N	N	N	SPR
Dry cleaners - processing	N	N	N	N	N	N	N
Printers and photo processors	SPR	CU/SPR	N	N	N	N	CU/SPR
Motor vehicle services/repairs and body shops/sales [limited to small operations; 10 or fewer vehicles on site at a time]	SPR	CU/SPR	CU/SPR	N	N	N	N
Gas and/or service stations, sale of gas accessory to retail	SPR	CU/SPR	N	N	N	N	N
Petroleum/petroleum product storage for retail/wholesale sales, including fuel oil distributors	N	N	N	N	N	N	N
Petroleum/petroleum product use/storage for business use; more than 660 gallons of liquid fuel per parcel	SPR	SPR	SPR	N	N	N	N
Petroleum/petroleum product use/storage for business use; 660 gallons or less of liquid fuel1 per parcel	P	P	P	N	N	N	CU/SPR
Auto washing facilities	SPR	N	N	N	N	N	SPR

Notes: *Overlay Districts are regulations and standards in addition to those of the underlying district. Where there is a discrepancy, the more restrictive provision applies. All uses, including "Allowed Uses" must comply with the Overlay District Performance Standards. The Royal River Corridor Overlay District includes the Royal River, Chandler Brook and the East Branch.

**Can only be conversions of buildings in existence as of June 14, 2005

.*** For all Land Use definitions please refer to section XII Definitions

TABLE 7.1 LAND USES BY ZONING DISTRICT (continued from prior page)

A = Allowed Use; P = Permitted Use (CEO Review); SPR = Site Plan Review (Planning Board Review) CU = Conditional Use (Planning Board Review); N = Prohibited Use

USES ***	Village Center	Village Residential	Farm and Forest	Resource Protection[9]	Residential Shoreland[9]	Royal River Overlay*	Groundwater Overlay*
Commercial and Industrial Uses (continued)							
Discharge of non-domestic wastewater or wash water to an onsite septic disposal system	N	N	N	N	N	N	N
Light manufacturing, Warehousing & Storage, and Trucking & Distribution less than 5,000 sq.ft. gross floor area	SPR	SPR	SPR	N	N	N	CU/SPR***
Light manufacturing, 5,000 sq.ft. to 20,000 sq.ft. gross floor area	SPR	SPR	SPR	N	N	N	N
Warehousing & storage, 5,000 to 20,000 sq.ft. gross floor area	SPR	N	CU/SPR	N	N	N	N
Trucking & distribution facility, 5,000 to 20,000 sq.ft. gross floor area	SPR	N	CU/SPR	N	N	N	N
Wholesale business, research & development, light manufacturing, warehousing & storage, or trucking & distribution facility, 20,000 sq.ft. gross floor area or more	N	N	N	N	N	N	N
Excavating contractors and general contractors	SPR	SPR	SPR	N	N	N	SPR
Funeral homes	CU/SPR	CU/SPR	N	N	N	N	SPR
Non-domestic solid waste disposal, transfer station and/or recycling facility	N	N	N	N	N	N	N
Junkyard/auto graveyard/auto recycling	N	N	N	N	N	N	N

Notes: *Overlay Districts are regulations and standards in addition to those of the underlying district. Where there is a discrepancy, the more restrictive provision applies. All uses, including "Allowed Uses" must comply with the Overlay District Performance Standards. The Royal River Corridor Overlay District includes the Royal River, Chandler Brook and the East Branch.

**Can only be conversions of buildings in existence as of June 14, 2005.

*** For all Land Use definitions please refer to Section XII Definitions ****Except that the Planning Board may substitute "sq. ft. of Building Footprint" for "sq. ft. gross floor area", as long as the applicant shows that the additional square footage will not impact the site as far as standards of review such as parking, # of employees, and impervious surface restrictions, and any other requirements of review. [Amended 5/13/06]

TABLE 7.1 LAND USES BY ZONING DISTRICT (continued from prior page)

A = Allowed Use; P = Permitted Use (CEO Review); SPR = Site Plan Review (Planning Board Review) CU = Conditional Use (Planning Board Review); N = Prohibited Use

USES***	Village Center	Village Residential	Farm and Forest	Resource Protection[9]	Residential Shoreland[9]	Royal River Overlay*	Groundwater Overlay*
Utility Uses							
Essential services, excepting the following (a. and b.)[10] [Amended 5/17/08]	P	P	P	SPR	SPR	P	CU/SPR
a. Roadside distribution lines (34.5kV and lower)	P	P	P	P	P	P	P
b. non-roadside or cross-country distribution lines	P	P	P	SPR	SPR	SPR	P
Large scale solar system	SPR	SPR	SPR	N	N	N	SPR
Service drops, as defined, to allowed uses[11]	A	A	A	P	A	P	A
Public utility buildings	SPR	SPR	SPR	SPR	SPR	SPR	SPR
Oil pipelines	CU/SPR	CU/SPR	CU/SPR	CU/SPR	CU/SPR	CU/SPR	N
Telecommunications towers	SPR	CU/SPR	SPR	N	SPR	N	SPR
Institutional Uses							
Public and private schools	SPR	SPR	CU/SPR	N	N	N	SPR
Public and private schools over 50,000 sq ft	CU/SPR	N	N	N	N	N	CU/SPR
Day care and nursery schools	SPR	SPR	CU/SPR	N	N	N	SPR
Church including accessory residence	SPR	SPR	SPR	N	N	CU/SPR	CU/SPR
Cemetery [13]	SPR	SPR	P	N	N	N	N
Library and museum	SPR	SPR	N	N	N	N	SPR
Fraternal and social institutions	SPR	CU/SPR	CU/SPR	N	N	N	CU/SPR
Municipal and other governmental buildings	SPR	SPR	SPR	N	N	N	SPR
New municipal transfer stations	SPR	SPR	SPR	N	N	N	N
Municipal recycling facility	SPR	SPR	N	N	N	N	SPR
Nursing home/congregate care	SPR	CU/SPR	N	N	N	N	SPR[12]
Small non-residential facilities less than 5,000 sq.ft gross floor area for educational, scientific, or nature interpretation purposes	SPR	SPR	SPR	N	SPR	N	SPR

Notes:
*Overlay Districts are regulations and standards in addition to those of the underlying district. Where there is a discrepancy, the more restrictive provision applies. All uses, including "Allowed Uses" must comply with the Overlay District Performance Standards. The Royal River Corridor Overlay District includes the Royal River, Chandler Brook and the East Branch.
*** For all Land Use definitions please refer to section XII Definitions

TABLE 7-1. LAND USES BY ZONING DISTRICT (continued from prior page) A = Allowed Use; P = Permitted Use (CEO Review); SPR = Site Plan Review (Planning Board Review) CU = Conditional Use (Planning Board Review); N = Prohibited Use							
USES* **	**Village Center**	**Village Residential**	**Farm and Forest**	**Resource Protection[9]**	**Residential Shoreland[9]**	**Royal River Overlay***	**Groundwater Overlay***
Recreational Uses							
Campground	N	N	SPR	N	SPR	CU/SPR	N
Individual campsite	P	P	P	P	P	P	P
Golf course including club house	SPR	SPR	SPR	CU/SPR[14]	SPR	N	N
Fully enclosed places of recreation	SPR	CU/SPR	N	N	N	N	SPR
Piers/Docks/Wharfs/Bridges – Permanent	P	P	P	SPR[15]	SPR[15]	SPR	SPR
Piers/Docks/Wharfs/Bridges – Temporary	P	P	P	P[15]	P[15]	P	P
Marinas/Sheds/Boating facilities	-	-	-	N	SPR	N	N
Non-intensive recreational uses not requiring structures, roads or parking facilities, such as hunting, fishing, hiking	A	A	A	A	A	A	A
Government and non-profit parks and outdoor recreation	P	P	P	CU/SPR	SPR	SPR	SPR
Public and private recreational areas involving no structural development; recreational trails	A	A	A	SPR	SPR	SPR	A
Natural Resource Based Uses							
Aquaculture	A	A	A	SPR	SPR	SPR	N
Agriculture[16]	A	A	A	SPR	A	A	SPR
Commercial processing of vegetables/crops raised on premises	P	P	P	N	SPR	N	SPR
Commercial processing of poultry and/or livestock raised on the premises (meat packer, slaughterhouse)	SPR	SPR	SPR	N	N	N	N
Storage, handling, processing, disposal and/or utilization of sludge/ash	N	N	N	N	N	N	N
Forest management activities, except timber harvesting	A	A	A	A	A	A	A

Notes: *Overlay Districts are regulations and standards in addition to those of the underlying district. Where there is a discrepancy, the more restrictive provision applies. All uses, including "Allowed Uses" must comply with the Overlay District Performance Standards. The Royal River Corridor Overlay District includes the Royal River, Chandler Brook and the East Branch.
.*** For all Land Use definitions please refer to section XII Definitions

TABLE 7-1. LAND USES BY ZONING DISTRICT (continued from prior page) A = Allowed Use; P = Permitted Use (CEO Review); SPR = Site Plan Review (Planning Board Review) CU = Conditional Use (Planning Board Review); N = Prohibited Use							
USES* **	**Village Center**	**Village Residential**	**Farm and Forest**	**Resource Protection[9]**	**Residential Shoreland[9]**	**Royal River Overlay***	**Groundwater Overlay***
Natural Resource Based Uses (continued)							
Timber harvesting	A	A	A	P	A	A	SPR[17]
Mineral exploration	N	N	P	N	P	A	N
Mineral extraction (including sand & gravel) 100 cubic yards to 999 cubic yards within any 12-month period	A	A	A	N	CU/SPR	N	CU/SPR
Commercial mineral extraction (including sand & gravel) 1,000 cubic yards or more within any 12-month period	N	N	SPR	N	N	N	N
Lumber yards including milling, distribution of wood products, wholesale/retail sales of building materials	SPR	SPR	CU/SPR	N	N	N	SPR
Commercial processing of wood including cutting, sawing, splitting, and chipping	SPR	SPR	SPR	N	N	N	SPR
Landscaping business, nursery, garden center	SPR	SPR	SPR	N	N	N	N
Soil and water conservation practices	A	A	A	A	A	A	A
Surveying and resource analysis	A	A	A	A	A	A	A
Wildlife management practices	A	A	A	A	A	A	A
Municipal and Public Safety Signs	SPR	SPR	SPR	SPR	SPR	SPR	SPR
Notes: *Overlay Districts are regulations and standards in addition to those of the underlying district. Where there is a discrepancy, the more restrictive provision applies. All uses, including "Allowed Uses" must comply with the Overlay District Performance Standards. The Royal River Corridor Overlay District includes the Royal River, Chandler Brook and the East Branch. . *** For all Land Use definitions please refer to section XII Definitions							

TABLE 7-1. LAND USES BY ZONING DISTRICT (continued from prior page) A = Allowed Use; P = Permitted Use (CEO Review); SPR = Site Plan Review (Planning Board Review) CU = Conditional Use (Planning Board Review); N = Prohibited Use							
USES* **	**Village Center**	**Village Residential**	**Farm and Forest**	**Resource Protection[9]**	**Residential Shoreland[9]**	**Royal River Overlay***	**Groundwater Overlay***
Other Uses							
Abandoned wells	N	N	N	N	N	N	N[18]
Private airstrip	P	P	P	N	CU/SPR	N	CU/SPR[19]
Commercial airport: fueling area or maintenance area	N	N	CU/SPR	N	N	N	N
Clearing or removal of vegetation for activities other than timber harvesting [Amended 5/17/08]	A	A	A	SPR	A	SPR	A
Demolition	P	P	P	P	P	P	P
Family Burial Ground [Amended 4/28/18]	SPR	SPR	SPR	SPR	SPR	SPR	SPR
Filling and earth moving of less than 10 cubic yards	A	A	A	P	A	A	A
Filling and earth moving of 10 cubic yards or more	A	A	A	SPR	P	P	P
Emergency operations and fire prevention activities	A	A	A	A	A	A	A
Land reclamation	P	P	P	SPR	P	SPR	SPR
Storage of chemicals, including herbicides, pesticides or fertilizers other than amounts normally associated with individual households or farms	SPR	SPR	SPR	N	N	N	N
Subsurface waste disposal and sewage systems	P	P	P	P	P	P	P
Advanced wastewater treatment systems	P	P	P	P	P	P	SPR
Storm water impoundments	SPR	SPR	SPR	N	N	N	SPR
Wastewater impoundments	N	N	N	N	N	N	N
Industrial waste disposal	N	N	N	N	N	N	N

Notes: *Overlay Districts are regulations and standards in addition to those of the underlying district. Where there is a discrepancy, the more restrictive provision applies. All uses, including "Allowed Uses" must comply with the Overlay District Performance Standards. The Royal River Corridor Overlay District includes the Royal River, Chandler Brook and the East Branch.
.*** For all Land Use definitions please refer to section XII Definitions

TABLE 7-1. LAND USES BY ZONING DISTRICT (continued from prior page)

A = Allowed Use; P = Permitted Use (CEO Review); SPR = Site Plan Review (Planning Board Review) CU = Conditional Use (Planning Board Review); N = Prohibited Use

USES***	Village Center	Village Residential	Farm and Forest	Resource Protection[9]	Residential Shoreland[9]	Royal River Overlay*	Groundwater Overlay*
Other Uses (continued)							
Parking associated with single family and two-family dwellings, and non-commercial farmsteads	A	A	A	N[20]	SPR	SPR	A
Parking associated with uses other than single-family and two-family dwellings, and non-commercial farmsteads	SPR	SPR	SPR	N	SPR	SPR	SPR
Road, driveway construction	P	P	P	N[21]	SPR	SPR	P
New or expanded driveway/entrance onto public road	P	P	P	N	SPR	SPR	P
Overnight storage or parking of vehicles and equipment containing over 50 gallons of fuel, excluding municipal storage and parking of vehicles	A	A	A	N	N	N	P
Covered sand and salt piles	P	P	P	N	N	N	SPR
Snow dumps	SPR	SPR	SPR	N	N	N	N
Railroad stations and railroad yards	CU/SPR	SPR	SPR	N	N	N	N
Underground fuel storage tanks, other than propane	P	P	P	N	N	N	N
Signs	P	P	P	P	P	SPR	P

Notes:
*Overlay Districts are regulations and standards in addition to those of the underlying district. Where there is a discrepancy, the more restrictive provision applies. All uses, including “Allowed Uses” must comply with the Overlay District Performance Standards. The Royal River Corridor Overlay District includes the Royal River, Chandler Brook and the East Branch.
.*** For all Land Use definitions please refer to section XII Definitions

SECTION 7.5 SPECIAL EXCEPTION FOR SINGLE FAMILY DWELLINGS AND ACCESSORY STRUCTURES IN THE RESOURCE PROTECTION DISTRICT [AMENDED 5/17/08; 6/17/24]

A. **New Single Family Residential Dwelling:** The Planning Board may approve a building permit for a new single-family residential dwelling in a Resource Protection District provided that the applicant demonstrates that all of the following conditions are met:

1. There is no location on the property, other than a location within the Resource Protection District, where the structure can be built.

2. The lot on which the structure is proposed is undeveloped and was established and recorded in the Cumberland County Registry of Deeds before the adoption of the Resource Protection District.

3. All proposed buildings, sewage disposal systems and other improvements are:

   a. Located on natural ground slopes of less than 20 percent; and

   b. Located outside the floodway of the 100-year floodplain along rivers, as delineated on the Federal Emergency Management Agency's Flood Boundary and Floodway Maps and Flood Insurance Rate Maps; all buildings, including basements, are elevated at least one foot abovethe 100-year floodplain elevation; and the development is otherwise in compliance with the town's Floodplain Management Ordinance.

4. The total ground-floor area, including cantilevered or similar overhanging extensions, of all principaland accessory structures is limited to a maximum of 1,500 square feet. This limitation shall not bealtered by variance.

5. All structures, except functionally water-dependent structures, are set back from the normal high- water line of the Royal River, Chandler Brook, the East Branch, or Toddy Brook, Deer Brook, Pratt'sBrook or the unnamed tributary to Chandler Brook (as mapped), tributary streams, or the upland edge of the Deer Brook wetland or Knight's Pond to the greatest practical extent, but not less than100 feet, horizontal distance. In determining the greatest practical extent, the Planning Board shallconsider the depth of the lot, the slope of the land, the potential for soil erosion, the type and amountof vegetation to be removed, the proposed building site's elevation in regard to the 100-year floodplain, and its proximity to the Deer Brook wetland, Knight's Pond and other high-value wetlands.

B. **Existing Single Family Residential Dwelling in the Resource Protection District Made Non-conforming with the Adoption of this Ordinance:** This provision applies to a parcel of land with an existing single family residential dwelling that was legally in existence prior to the adoption of this Ordinance(June 14, 2005), but which was made non-conforming by the adoption of this Ordinance due to the rezoningof the parcel as a Resource Protection District. Under these conditions, the Planning Board may approvea building permit for the expansion of the existing single-family residential dwelling and/or for the additionof an accessory structure in the Resource Protection District provided that the applicant demonstrates that all of the following conditions are met:

1. The lot on which the expansion of the single family dwelling or accessory structure is proposed wasestablished and recorded in the Cumberland County Registry of Deeds before the adoption of thisOrdinance (June 14, 2005) and the establishment of the Resource Protection District in an area that was not zoned as a Resource Protection District prior to June 14, 2005.

2. All proposed buildings, sewage disposal systems and other improvements are:

   a. Located on natural ground slopes of less than 20 percent; and

   b. Located outside the floodway of the 100-year floodplain as delineated on the Federal Emergency Management Agency's Flood Boundary and Floodway Maps and Flood Insurance Rate Maps; all buildings, including basements, are elevated at least one foot above the 100- year floodplain elevation; and the development is otherwise in compliance with the town's Floodplain Management Ordinance; and

   c. Located outside a forested wetland larger than 2 acres that abuts the Royal River, Chandler Brook or the East Branch.

3. The total ground-floor area, including cantilevered or similar overhanging extensions, of all principal and accessory structures is limited to a maximum of 2,000 square feet. This limitation shall not be altered by variance.

4. All structures, except functionally water-dependent structures, are set back from the normal high- water line of the Royal River, Chandler Brook, the East Branch, or Toddy Brook, Deer Brook, Pratt's Brook or the unnamed tributary to Chandler Brook (as mapped), tributary streams, or upland edge of the Deer Brook wetland or Knight's Pond to the greatest practical extent, but not less than 100 feet, horizontal distance. In determining the greatest practical extent, the Planning Board shall consider the depth of the lot, the slope of the land, the potential for soil erosion, the type and amount of vegetation to be removed, the proposed building site's elevation in regard to the 100-year floodplain, and its proximity to the Deer Brook wetland, Knight's Pond and other high-value wetlands.

5. The accessory structure may include structures for personal use, such as a garage, barn, accessory dwelling unit or swimming pool, but may not include a home occupation, or any other use prohibited within a Resource Protection District by this Ordinance.

SECTION 7.6 SPACE AND DIMENSIONAL REQUIREMENTS [AMENDED 5/17/08; 6/19/21; 6/17/24]

A. **Minimum Requirements:** All lots and structures in all districts shall comply with the following Space and Dimensional Requirements. Other provisions of this Ordinance may impose additional requirements. It is a violation of this Ordinance to create a lot that does not meet the space and dimensional requirements of this section, unless allowed through another provisions of this Ordinance.

B. Calculation of Lot Size and Dimensions: [Amended 4/9/16]

   1. For the purpose of calculating dimensional requirements an acre shall be 43,560 square feet.

   2. If more than one residential dwelling unit, principal governmental, institutional, commercial or industrial structure or use, or combination thereof, is constructed or established on a single parcel, all dimensional requirements shall be met for each additional dwelling unit or principal structure. For purposes of this section, an accessory dwelling unit shall not be counted as a residential unit or principal structure [Amended 5/17/08]

   3. If more than one principal structure is located on a lot, the lot size and location of each structure shall be such that a separate lot conforming to the provisions of this Ordinance could be created for each building. The creation of a separate lot shall be demonstrated by submitting a plan to the Code Enforcement Officer (CEO) showing how the land could be divided to create conforming lots.

4. Land beneath roads serving more than 2 lots shall not be included toward calculating minimum lotarea. In addition, the following areas shall not be included toward calculating minimum lot area:
   a. land below the normal high-water line of the Royal River, Chandler Brook and the East Branch;
   b. land below the normal high-water line of those sections of Toddy Brook, Pratt's Brook, Deer Brook and the unnamed tributary to Chandler Brook that are zoned as Resource Protection Districts; and
   c. land below the upland edge of the Deer Brook Wetland or Knight's Pond Wetland.

5. Wherever possible, side lot lines shall be perpendicular to the street.

6. If a lot on one side of a stream, brook or private road fails to meet the minimum requirements for lot size, it may be combined with a lot on the other side of the stream, brook or private road to meetthe minimum lot size.

Footnotes Key --

(1) Refer to Section 7.6.C. Calculation of Net Residential Density and Net Residential Acreage for standards related to Maximum Residential Density.
(2) Refer to Section 7.6.D. Pocket Neighborhoods for additional standards related to Pocket Neighborhoods.
(3) Maximum Structure Height is not applicable to wireless communication towers, windmills, antennas, barn silos and structures having no floor area.
(4) Minimum Lot Size:
- a. The minimum lot size can be reduced in the VC to 20,000 square feet when the lot is served by an advanced wastewater treatment system, or the existing system is retrofitted with an advanced wastewater system that meets or exceeds the standards and requirements imposed by Section 11.11.B of this Article.
- **b.** Gallon Per Day (GPD) design flows may be utilized when presented and proven to not exceed the assumed 4 bedroom or 360 GPD flows of a typical residential home per lot; this type of development requires Planning Board approval.
- **c.** Pocket Neighborhoods allow for the use of reduced lot size below 20,000 square feet; refer to Section 7.6.D. for more information.

(5) Open space or clustered subdivisions are mandatory in the Farm and Forest Zoning District and at least 50% of the total parcel must be preserved; refer to Section 11.3 Cluster Housing Development and Open Space Development for more information.
(6) Additional units may be constructed as a) one unit within or attached to the existing dwelling unit; b) one unit detached; or c) one of each.
(7) If a property owner tears down an existing dwelling unit in order to construct more dwelling units, the lot shall be treated as if the dwelling unit were still in existence for purposes of redevelopment.
(8) Maximum number of dwelling units per lot is as set forth in Section 10.4.

TABLE 7.2 SPACE AND DIMENSIONAL REQUIREMENTS [AMENDED 6/19/21, 11/08/22; 6/17/24]

District	Minimum Lot Area Per Dwelling Unit Size (Acres)	Maximum Residential Density[1] (Acres)	Maximum Dwelling Units per Vacant Lot (Residential)	Maximum Dwelling Units per Lot with Existing Dwelling Unit[6,7]	Maximum Lot Coverage (%)	Street Frontage (feet)	Structure Setback From Property Lines(Feet)			Maximum Structure Height (Feet)[3]
							Front	Side	Rear	
Village Center [2]	1 acre[4]	N/A	See Note 8	See Note 8	70%	100' MIN	10' MIN	10' MIN	5' MIN	3 stories, no higher than 50 feet
Village Residential	1 acre	1 Residential unit per acre; Subdivisions – 1 residential unit per net residential acre	2 units	3 units	30%	Routes 9, 115 and 231 – Min 200 feet; Other streets – Min100 feet	20' Min	10' MIN	10' MIN	2.5 stories, no higher than 35 feet
Farm and Forest [5]	3 acres	1 Residential unit per 3 acres; Subdivisions – 1 residential unit per 3 net residential acres	2 units	3 units	20%	Min 200 feet	50' Min	20' MIN	20' MIN	2.5 stories, no higher than 35 feet
Residential Shoreland	3 acres	1 Residential unit per 3 acres; Subdivisions – 1 residential unit per 3 net residential acres	2 units	3 units	20%	Min 200 feet	50' Min	20' MIN	20' MIN	35'
Resource Protection	3 acres	1 Residential unit per 3 acres; Subdivisions – 1 residential unit per 3 net residential acres	2 units	3 units	20%	Min 200 feet	50' Min	20' MIN	20' MIN	35'

Table Continued on Next Page

TABLE 7.2 SPACE AND DIMENSIONAL REQUIREMENTS (Continued from prior page)						
District	**Minimum Lot Size (Acres)**	**Maximum ResidentialDensity[1] (Acres)**	**Maximum Lot Coverage**	**Street Frontage**	**Structure Setback from Property Lines**	**Maximum Structure Height**
Royal River Corridor Overlay	3 acres	Same as underlying district	Same as underlying district			
Groundwater Protection Overlay	Single lots not part of a subdivision must meet the minimums for the underlying district; no reduction in lot size shall be permitted.	Same as underlying district	Same as underlying district			

Cross Reference Notes for other provisions with dimensional requirements:

Section 10.29 Subdivision Street Connectivity in the Village Center District and Village Residential District - Provisions for the length, spacing and connectivity of streets in subdivisions.

Section 10.30 Subdivision Street Length in the Farm and Forest District and Residential Shoreland District - Provisions for the length of dead-end streets in subdivisions.

Section 11.2 Affordable Housing – Encourages the use of clustered housing design pursuant to Section 11.3 Clustered Housing Development and Open Space Development and allows for the granting of a density bonus of up to 20 percent under certain conditions.

Section 11.3 Clustered Housing Development and Open Space Development – Clustered housing development and/or open space development is mandatory in the Farm and Forest District, Residential Shoreland District and the Resource Protection District, and optional in the Village Center District and Village Residential District. The provisions allow modification of minimum lot size, street frontage, maximum lot coverage and setbacks to permit innovative approaches to development and environmentaldesign in accordance with the standards. Subsection C.7.b allows for a density bonus of up to 20 percentfor the inclusion of public open space for recreation and protection of high value scenic areas.

Section 11.6 Mobile Home Parks – Provisions for minimum lot size, setbacks, frontages, etc. for mobile home parks.

C. **Calculation of Net Residential Density and Net Residential Acreage:** For the purposes of creating a subdivision, net residential acreage shall be the area determined by the Planning Board to be suitable for development.

1. The area shall be calculated by subtracting the following from the total acreage of the tract or parcel:

   a. Areas that are cut off from the main parcel by existing land uses, improvements, topographical features or previous conveyances so that no means of access can be

reasonably provided, andthe land is isolated and unavailable for development;

b. Areas located below the normal high water mark of water bodies (ponds, rivers, streams or brooks) abutting or located on the parcel;

c. Areas located in the 100-year floodplain as designated on the most recently adopted Flood Insurance Rate Map and the Flood Hazard Area Map of the National Flood Insurance Programfor the Town of North Yarmouth;

d. Areas within 250 feet of the Royal River, Chandler Brook, and the East Branch;

e. Areas classified as wetlands as defined by the Maine Natural Resources Protection Act, Title 38 M.R.S. Sections 480-B, Definitions, as amended.

f. Areas which have been created by filling or draining a pond or wetland;

g. Areas consisting of un-reclaimed gravel pits, unless the subdivision application includes a reclamation plan;

h. Areas having slopes greater than twenty percent (20%);

i. Areas having very poorly drained soils, and

j. Areas subject to existing rights-of-ways or easements.

2. In addition, fifteen percent (15%) of the total acreage of the site remaining after subtracting those areas listedabove shall be deducted as an allowance for streets, parking and rights-of-way, whether or not theactual area devoted to streets is greater or less than fifteen percent (15%). However, the fifteen percent (15%) deductionshall not be subtracted when there are no streets planned as part of a subdivision.

3. For determination of poorly and very poorly drained soils, soil classifications shall be developed based upon high intensity soils mapping conducted by a certified soil scientist, in accordance withthe standards established by the Maine Association of Professional Soil Scientists and the NationalCooperative Soils Survey unless waived by the Planning Board. In cases where the requirement ofa high intensity soils map is waived by the Planning Board, deductions for unsuitable soils shall bedetermined in the following manner: land areas with a water table within

4. Six (6) inches of the surface for three (3) or more months a year shall be deducted. In making this determination, the Planning Board shall consider medium-intensity soils maps, perform site visits, consult expert and review other available information as provided by the applicant.

5. **Net Residential Density:** Net residential density shall mean the number of dwelling units per netresidential acre.

D. **Pocket Neighborhoods** allow for the arrangement of a single building type around a commoncivic space to promote greater density than otherwise allowed with the base district.

1. The purpose of a Pocket Neighborhood is:
   a. To allow increased density without altering the underlying zoning.
   b. To allow the creation of fine-grained civic space surrounded by buildings of the sametype.
   c. To enable a close arrangement of buildings that would not otherwise be possible.

2. Pocket Neighborhoods must be designed to meet the following standards:
   a. Pocket Neighborhoods consist of three elements; the building lots on which buildings are placed, the civic space around which the building lots are arranged, and access areas which may or may not include driveways, parking lots, and pedestrian walks.

   b. Pocket Neighborhoods include one of the following three house types, subject Section X 10.4 Building Standards:
      1) A cottage
      2) A bungalow - The gable of the bungalow must not face the civic space
      3) A townhouse

   c. Pocket Neighborhoods do not contain garages.

   d. The total frontage of a Pocket Neighborhood may not exceed 300 ft. in aggregate length along anysingle thoroughfare.

   e. Pocket Neighborhoods may not contain public or private thoroughfares, except that a new public or private thoroughfare may be constructed adjacent to a pocket neighborhood to provide frontage for the Pocket Neighborhood.

   f. Pocket Neighborhoods can be configured in one of three ways:

      1) Corner-Courts are built on a corner-lot or are assembled from lots with combined frontageon two intersecting thoroughfares.
      2) Through-Courts are built on a through-lot or are assembled from lots to create a through lotwith frontage on two non-intersecting thoroughfares.
      3) Interior-Courts are built on an interior lot or are assembled from lots to create a lot withcombined frontage on only one thoroughfare.

   g. Parking lots within a Pocket Neighborhood may provide no more than one (1) parking space per unitconstructed within the Pocket Neighborhood. One additional parking space per four (4) units may be provided for guest parking.

   h. Parking within a Pocket Neighborhood must be set back from all abutting thoroughfares by no less than thirty(30) feet with the exception of alleys.

   i. The civic space at the center of a Pocket Neighborhood must be at least twenty (20) ft. wide on its shortestside and have an area not smaller than 1000 sf and not larger than 10,890 sf (1/4 acre).

   j. The civic space must be built to create a common, park, or square.

   k. A civic space with four (4) or more sides must directly front a thoroughfare or alley on at least one side andno more than two (2) sides.

   l. A civic space with three (3) sides must directly front a thoroughfare or alley on only one side.

   m. A Pocket Neighborhood must consist of at least four (4) and no more than twenty (20) units of the permitted building types.

   n. No building may orient a rear wall towards the civic space or any thoroughfare, except alleys.

   o. Building lots must meet the following lot measurement and building setback rather than for the base zoning district:

1) primary front setback of zero (0) ft. min - ten (10) ft. max, secondary front setback of zero (0) ft. min – ten (10) ft.max; side setback five (5) – twenty-five (25) ft. max; rear setback five (5) ft. min.

2) No building lot may be greater than five thousand (5,000) sf

p. Pedestrian walkways and sidewalks providing access within a pocket neighborhood court may not exceed a width of ten (10) ft.

q. An access driveway must be between eight (8)- fourteen (14) ft in width.

VIII. GENERAL REQUIREMENTS: APPLICABLE TO ALL LAND USES

SECTION 8.1 PURPOSE AND APPLICABILITY

A. **Purpose:** The purpose of this Section is to encourage orderly growth and development, encourage development design that minimizes road access points to public roads and retains access to back land and protects the environment and adjacent properties.

B. **Applicability:** The provisions of this Section are applicable to all allowed and permitted land use activities, including those activities that require permits from the Code Enforcement Officer (CEO) as listedin Section III. Administration and Enforcement and Section VII. Zoning District Regulations, Table 7-1. LandUses by District. This Section (other than Section 8.4) is not applicable to land use activities that require SitePlan Review or Subdivision Review pursuant to Section VII. Zoning District Regulations, Table 7-1. Land Uses by District.

SECTION 8.2 UTILIZATION OF THE SITE

The plan for any development must reflect the natural capabilities of the site to support the development. Buildings, lots and support facilities must be located in those portions of the site that have the most suitable conditions for development. Environmentally sensitive areas, including but not limited to, wetlands, steep slopes, 100-year floodplains, significant wildlife habitats and corridors, scenic areas, unique natural areas, and significant groundwater aquifers must be maintained and preserved to the maximum extent. Natural drainage areas must also be preserved to the maximum extent. A development must include appropriate measures for protecting these resources, including but not limited to, modification of the proposed design of the site, timing of construction, and limiting the extent of excavation.

SECTION 8.3 BACK LOTS AND STREET ACCESS REQUIREMENTS [AMENDED 6/19/21; 6/17/24]

A. Single– family dwellings, duplex dwellings and non-residential structures shall be permitted on back lotsprovided they are served by a private right-of-way no less than fifty (50) feet wide, and subject to the following conditions:

1. Back lots must be served by a right-of-way of at least fifty (50) feet in width. The street frontage on the fifty (50) foot right-of-way serving a back lot shall not be included in calculating minimum street frontagefor the adjacent lots fronting on a street.

2. All residential and non-residential lots and other lots with buildings for human occupation shall haveadequate access roads for emergency vehicles to enter, turn around, and exit. (town's Roadway Ordinance)

3. Where a lot is in existence and is provided by a private right-of-way recorded at the Cumberland County Registry of Deeds prior to the adoption of this Ordinance (June 14, 2005), and expansion of the right-of-way is not possible, a right-of-way of fifty (50) feet will not be required.

4. **Private Roads Serving Three or More Residential Units and/or Non-residential Uses:** This subsection is applicable to situations that do not meet the definition of a subdivision. Any access road serving three or more lots shall be constructed within a right-of-way with a minimum width of fifty (50) feet, and with a minimum traveled way width meeting Table 2 in section 8.4 H.4 and the town's Roadway Ordinance. Drainage culverts at the intersection of the access road and the public street shall be no less than eighteen (18) inch aluminized corrugated metal pipe or equivalent as determined by the Road Commissioner. The access road shall be built to maintain a minimum depth also described in Table 2 in section 8.4H.4 and the town's Roadway Ordinance.

5. **In the Farm and Forest District, Residential Shoreland District and Resource Protection District**, back lots shall require a buildable lot containing no less than 4 acres for a single family dwelling unit or non-residential principal structure, and no less than 6 acres for a duplex or two non-residential principal structures, and a minimum lot width of 200 feet. No dwelling unit or other principal structure shall be erected on a back lot closer than 250 feet to an existing public street inthese districts.

6. **In the Village Center District and Village Residential District**, residential back lots shall meet the dimensional requirements for the District, and non-residential back lots shall be a minimum of 1 acre in size.

7. **In the Water District service area**, the backlot owner may own the right-of-way in fee or by easement. [Amended 6/18/11]

SECTION 8.4 DESIGN AND CONSTRUCTION STANDARDS FOR ROADS AND DRIVEWAYS [AMENDED 6/19/21]

A. **Purpose** Applications for new private roads after the effective date of this amendment shall not be approved by the Code Enforcement Officer unless the proposed road construction meets the design and other standards set forth town's Roadway Ordinance and Section 8.4, as applicable, including the minimum roadway widths set forth in Table 8.2 in this section. However, if the applicant requests waiver ofthe roadway width otherwise applicable to new private roads, the Planning Board may apply a lesser roadway width per Table 8.2 to applications for new private roads after the effective date of this amendmentif the waiver standards set forth in this section have been met. On or after the effective date of this amendment, applications for extensions of private roads in existence as of the effective date of this amendment, are subject to this section, including Table 8.2 and the town's Roadway Ordinance.

B. **Classification.**
Streets are classified according to the average daily traffic (ADT) they are intended to serve, as calculated by the number of average daily trips, as follows:

1. Average daily trip. "Average daily trip" shall be defined as the anticipated number of daily vehicle trips generated by a use as established by the Trip Generation Manual, published by the Institute of Transportation Engineers, 1991. If the applicant disagrees with the estimated number of trips per day generated by a particular use as listed by the Trip Generation Manual published by the Institute of Transportation Engineers, then the applicant may request a waiver of these standards if information is submitted demonstrating that the Trip Generation Manual estimate is inaccurate. Table 1 lists the estimated number of average weekday trips for residentialuses.

Table 8.1

Average Weekday Trip Generation Rates	
	Housing Type (trips per dwelling unit)
Single- family detached	10
Duplex, Townhouse, Apartments, Condominium, etc.	8
Mobile Home	5.5
Retirement Home	3.5

Arterial streets and highways serve primarily as major traffic ways for travel between and through towns.

Private streets serve as feeders to access, sub collector, and collector residential streets and maybe the principal entrance streets of a residential development these streets are defined as having (3) or more dwelling units or uses.

Residential access streets serve primarily for access to abutting residential properties and as feeders to other residential streets of equal of greater capacity. Access streets are intended to serve developments with average daily trips less than 199.

Residential sub collector streets serve as collectors from access or private streets and as feeders to collector streets; they are intended to serve developments with average daily trips of two hundred (200) to five hundred (500).

Residential Collector Street serve as collectors from sub collector streets and as feeders to arterial streets; they are intended to serve developments with average daily trips greater than five hundred (500).

Commercial access streets serve commercial and industrial developments with average daily trips less than two thousand (2,000).

Commercial collector streets serve commercial and industrial developments with average daily trips of two thousand (2,000) or more.

Classification of street types will be made by the Planning Board within the considerations outlined above.

C. **Layout**

1. All streets in the subdivision shall be so designed that, in the opinion of the Planning Board, they will provide safe vehicular travel while discouraging movement of through traffic over local streets.

2. The arrangement, character, extent, width, grade and location of all streets shall be considered intheir relation to existing or planned streets, to topographical conditions, to public convenience andsafety, and their appropriate relation to the proposed use of the land to be served by such streets.Grades of streets shall conform as closely as possible to the original topography.

3. In the case of dead-end streets, where needed or desirable, the Planning Board may require the reservation of a minimum thirty-foot-wide utility easement and/or minimum twenty-foot-wide right- of-way for pedestrian and/or bicycle traffic. The Planning Board may require that additional right- of- way widths be provided if it determines that future extension of the street

may occur. Such additional widths shall be consistent with the right-of-way width of the dead-end street.

4. In front of areas zoned and designed for commercial use, or where a change of zoning to a zone which permits commercial use is contemplated by the municipality, the street right-of-way and/or pavement width shall be increased by such amount on each side as may be deemed necessary bythe Planning Board to assure the free flow of through traffic without interference by parked or parking vehicles and to provide adequate and safe parking space for such commercial or business district. In no case shall the street have a right-of-way width and pavement width less than that specified in Table 2 and the town's Roadway Ordinance.

5. Where a subdivision borders on or contains a railroad right-of-way, the Planning Board may require a street approximately parallel to and on each side of such right-of-way at a distance suitable for the appropriate use of the intervening land, as for park purposes in appropriate districts. Such distances shall also be determined with due regard for approach grades and future grade separations.

6. Where a subdivision borders an existing narrow road (below standards set herein), the applicant shall be required to show areas for widening or realigning such roads on the plan, marked "Reserved for Road Realignment (or Widening) Purposes." Land reserved for such purposes maynot be counted in satisfying setback or yard or area requirements.

7. The extension or continuation of an existing street right-of-way less than that specified herein maybe permitted with the approval of the Planning Board.

8. The design of subdivision streets shall provide for the continuation of streets to and from adjacentsubdivisions and/or undeveloped land, where the Planning Board determines that interconnectionof streets is physically feasible and would contribute to the safety and function on the street system.If connection to an existing street is not possible at the time of the subdivision, a temporary dead end street shall end in a hammerhead turn-around designed in accordance with the town's Roadway Ordinance. A right-of-way shall be extended from the hammerhead turn-around to the neighboring property line for future extension. The right-of-way shall be dedicated to the town. This shall be labeled "Future Street Extension" on all plans of the project and noted in all deeds. Reserved street for future street connection to adjoining undeveloped property shall be dedicated to the town. The developer of theadjoining property can be required by the Planning Board to connect to and build over the reservedstrips. Reserved strips not to be used shall be dispensed with according to 23 M.R.S. Section 3027.

9. Entrances, either proposed driveways or streets, onto existing state aid or state highways must beapproved by the Maine Department of Transportation. Copies of such approval shall be submittedto the Planning Board at the time of final review.

10. Utility location and type stall be shown on design drawings submitted and must be approved by theresponsible utilities. Copies of written approval shall be submitted to the Planning Board at the time of final review.

11. If the Planning Board determines that future development will occur on land adjacent to or near a proposed subdivision, whether it is owned by the applicant or not, then the Planning Board shall retain the right to require the applicant to meet the requirements for collector street design and construction as specified herein at no cost to the Town.

D. **Street signs and names.**

1. **Streets**: Streets which join or are in alignment with streets of abutting or neighboringproperties shall bear the same name. Names of new streets shall not duplicate nor bear phonetic resemblance to the names of existingstreets within the Town and shall be subject to the approval of the Planning Board with recommendations from Road Commissioner and Fire Rescue Chief.

2. **Street name:** signs shall be furnished and installed by the Town but appropriate fees charged to the applicant to do so. The type, size and location shall follow the town's Roadway Ordinance.

3. **Traffic control devices:** The applicant shall furnish and place all appropriate signing and pavement markings required for the proper control of pedestrian, bicycle and vehicular traffic within the subdivision. The types and locations of all such devices shall be determined by the Planning Board and Road Commissioner, if appropriate, and shall be in conformance with the Manual on Uniform Traffic Control Devices, as currently revised.

4. **Street lighting:** The applicant shall coordinate with the appropriate servicing utility and the Road Commissioner the locating and placing of any lighting. Light poles and luminaires shall be a type approved by the Planning Board and said utility.

E. **Design and construction standards.**
All streets in the subdivision shall be designed and constructed to meet the following standards for streets according to their classification, including whether urban or rural standards apply, as determined by the Planning Board:

1. **Urban**: Urban standards shall apply to all roads that are constructed using subsurface drainage and curbing. Urban standards may be applied to rural roads at the Planning Board's discretion if conditions so warrant, such as topography, soil conditions and aesthetics. Urban design standardsshall be defined as paved streets with such appurtenances as curbs, esplanades, a byway, and anenclosed storm drainage system with catch basins, manholes, and associated piping.

   a. The Planning Board shall require the provision of a byway under the urban design standards, which for purposes of this subsection B(1) shall include only a sidewalk or free walk; provided,however, that, a free walk may be substituted for a sidewalk if in the opinion of the Planning Board such substitution will not significantly lessen drainage efficiency, or the requirement ofa byway may be waived altogether.

   b. Road classifications as described in B(1) standards shall be used for all street designs in the Town, except as specified above. Road design standards shall be defined as paved streets with gravel shoulder, side ditches for the transportation of stormwater and a byway. The Planning Board shall require the provision of a byway under the town's Roadway Ordinance, whichfor purposes of this subsection B(1) shall include only a free walk or paved shoulder; provided,however, a paved shoulder may be substituted for a free walk; or the requirement of a byway may be waived altogether.

2. **Rural:** Rural design standards as set forth herein shall be used for all other streets not classified under the urban street category. Rural shall be defined as paved or gravel streets with gravel shoulders, side ditches and a byway unless a waiver is granted at the time of application from the Planning Board.

a. The Planning Board shall require the provision of a byway under the rural design standards, which for purposes of this subsection D(2) shall include only a free walk or paved shoulder; provided however a paved shoulder may be substituted for a free walk, or the requirement of abyway may be waived altogether.

3. **Dimensions of street construction**: The dimensions for street construction shall beshown in Table 8.2 and listed in the town's Roadway Ordinance.

4. **Dead-end streets**:

a. Presentation of special design, discussion and written permission by the Planning Board shall be required for those conditions that may require dead-end streets under the category of residential sub collector, residential collector, commercial access, or commercial collector.

b. The terminus of any dead-end street must have a cul-de-sac, with standards as listed below. Other types of turnarounds may be approved by the Planning Board after receiving a recommendation by the Fire/EMS Chief and Road Commissioner. Cul-de-sac island area shallbe restricted to pavement, or where the radius is large enough the Planning Board may permitother cover types.

c. Standards as listed under Subsection b shall be applicable for dead-end streets. In addition, the following requirements shall be fulfilled:

1) Maximum length of dead-end streets shall be limited to fifteen hundred (1,500) feet measured from the center line of the feeder street to the center of the turnaround radius. However, the Planning Board may allow longer lengths because of property configuration and/ortopographical constraints.

2) Radii at cul-de-sac with center island:
(a) Property Line: seventy (70) feet
(b) Outer edge of pavement: sixty (60) feet

3) Radii at cul-de-sac without center island:
(a) Property Line: sixty (60) feet
(b) Outer edge of pavement: fifty (50) feet

F. Roadway Construction Materials

1. General roadway construction materials as specified herein shall conform to the current specifications of the Maine Department of Transportation.

a. Standards and dimensions tabulated herein shall be considered as minimum. The applicantshall be required to investigate and determine the types and classifications of the soils

1) Computations shall be made to determine pavement design standards for construction, which shall be submitted to the Road Commissioner for review.

2) If the existing native soil through the subbase course area can be defined as being equal in quality and thickness to the minimum requirements specified herein, the Planning Board may waive a portion or all of the minimum requirements for subbase courses. In any event, the ultimate density of any material left in place shall conform to

the minimumrequirements for compaction specified herein.

3) If, during construction, subsurface soils vary from the original classification, the pavement design shall be modified to reflect the new soil types. Revised pavement designs shall be submitted to a third party engineer for approval at the owner's expense.

4) All aspects of work using geo-textile shall be in conformance with MDOT.

2. Materials

a. The minimum thickness of the various materials courses shall be shown in Table 8.2

b. Curbing materials shall be either granite stone curbing, Type 1, or bituminous curbing, Type 3. Type 1 vertical circular curbing shall be used for radii at intersections.

G. **Construction specifications**.

All streets within a subdivision shall be constructed according to the specifications herein as overseen bythe Road Commissioner.

1. **Grading:** All streets shall be graded to their full width by the applicant so that pavements and sidewalks can be constructed on parallel profiles. Due to special topographical conditions, deviationfrom the above will be allowed only with approval of the Planning Board.

a. **Preparation.** Before grading is started, the entire right-of-way area shall be cleared of all stumps, roots, brush, and other objectionable material and all trees not intended for preservation.

b. **Cuts:** Tree stumps, roots, and other organic materials shall be removed to a depth of two feet below the subgrade. Rock and boulders, when encountered, shall be removed to subgrade.

c. **Fill:** All materials used in the construction of embankments shall meet the standards for embankment construction, Sections 203.09 through 203.16 of the Maine Department of Transportation Standard Specifications. Excess material, including organic materials, etc., shall be removed from the street site. The fill shall be spread in layers not to exceed 12 inches loose and compacted. The filling of utility trenches and other such areas shall be mechanicallytamped.

d. All underground utilities and their services shall be installed within the street right-of-way priorto placement of the aggregate base course (crushed gravel).

e. **Side Slopes:** All side slopes shall be a maximum slope of three horizontal to one vertical. Allslopes shall be graded, loamed (four inches compacted), fertilized, limed and seeded as required.

2. **Bases and Pavement**

a. The appropriate sections of the bases and pavements divisions of the Maine Department of Transportation Standard Specifications in effect at the date of submission of the application shall be applicable.

b. **Bases**:

1) Aggregate subbase course: gravel (Type D). Aggregate subbase shall not contain particles of rock exceeding six inches in any dimension.

2) Aggregate base course: crushed (Type A). Aggregate base shall not contain particles of rock that will not pass a two-inch-square mesh sieve.

3) Where pavement placed joins an existing pavement, the existing pavement shall be cut along a smooth line and to a neat, even, vertical, joint. Broken or raveled edges will not be permitted, nor deviation from grade.

4) Gradation of aggregates for plant mix hot bituminous pavements shall be as specified in Division 700 of the Maine Department of Transportation Standard Specifications.

3. **Curbing**.

Section 609 of the Maine Department of Transportation Standard Specifications shall be applicable, except as follows:

a. Curbing shall be limited to Type 1 and Type 3.

b. Vertical or sloped curbing shall be used in accordance with the design standards set forth herein for the particular type of street. All curbs shall have a typical reveal of six (6) inches.

c. Type 1 curbing shall be used for radii at all intersections unless waived by the Planning Board.

4. **Byways**.

a. **Sidewalk:** Sidewalk construction shall comply with Section 608 of the Maine Department of Transportation Standard Specifications. Sidewalks shall have typical cross slopes of 3/8 inchper foot.

b. **Free walk:** A free walk shall be four feet wide, shall consist of two-inch-thick asphalt with an eight- inch gravel subsurface and shall be separated from the paved portion of the road by a grassy esplanade with a minimum width of four feet.

c. **Paved shoulder:** A paved shoulder shall be constructed to the same road construction materials standards as the adjoining road. The paved shoulder shall be contiguous with the roadbed and shall be separated from the roadway by a painted, solid white line.

5. **Monuments: All** lot corners shall be marked with iron pipe not less than one inch in diameter and48 inches long and driven so as to be flush with the finished grade.

H. **Private Streets**

1. The private street application shall be accompanied by a plan showing the private street(s), which plan shall be prepared by a registered land surveyor. The plan shall be drawn in permanent ink on permanent transparency material and shall be sealed by the surveyor preparing the plan. The plan shall be labeled "Plan for a Private Street" and shall provide an approval block for the signature of the Code Enforcement Officer or Planning Board if waivers are requested, the date of the approval, and the words "Private Street, Approved by the Town of North Yarmouth." The plan shall show information sufficient to establish on the ground the

exact location, direction, width, and length of the private street. Where a proposed private street contains severe slopes, stream crossings, or a significant amount of cut and fill, the applicant shall also provide a profile of the street. In addition, a street plan and cross section shall be submitted for each new private street serving three or more dwelling units. The plan shall also contain a note which shall read: "The Town of North Yarmouth shall not be responsible for the maintenance, repair, plowing, or similar services for the private street shown on this plan." The original plan(s) shall be recorded in the Cumberland County Registry of Deeds within 90 days of approval of the plan of the private street, and proof of such recording shall be submitted to the Code Enforcement Officer prior to the issuance of any building permit. If the plan is not recorded within this period, the approval shall be void.

2. If the private street provides access to three or more dwelling units, the applicant shall prepare a maintenance agreement and shall submit this as part of the application. This maintenance agreement shall specify the rights and responsibilities of each lot owner with respect to the maintenance, repair and plowing of the private street. The applicant shall record this maintenanceagreement in the Cumberland County Registry of Deeds within 90 days of approval of the plan ofthe private street by the Code Enforcement Officer or Planning Board and shall submit proof of such recording to the Code Enforcement Officer prior to the issuance of any building permit. Deedsto new lots located on private streets servicing three or more dwelling units shall include referencesto the required maintenance agreement.

3. Private streets shall have a minimum right-of-way width of 50 feet and a paved apron at least twenty feet in length commencing at the edge of pavement where it intersects with existing streetunless existing street is unpaved. The paved apron shall be constructed to the following standards.

    a. Fifteen inches of base gravel meeting MDOT Spec. 703.06 Type D.

    b. Three inches of surface crushed gravel meeting MDOT Spec. 703.06 Type A.

    c. The thickness of paving of the apron shall be a total thickness of three inches of hot bituminous pavement, with a surface course (Grading "C") of one inch and a base course (Grading "B") of two inches.

    d. A negative two-percent grade from the existing edge of pavement to an appropriate drainage way, but in no case less than five feet from the travel surface of the public street it intersects.

    e. Approach radius shall be specified by the Road Commissioner.

4. **Private streets Table 8.2**

    The construction of private streets shall meet the following minimum standards: All newly created Private Streets, after the adoption of this ordinance must meet the dimensional standards of column3 unless granted a waiver through the Planning Board.

Table 8.2

Number of Dwelling Units Served			
	1	**2**	**3**
Minimum roadway width (feet)	**3 to 5 16***	**6 to 10 18***	**11 or more**
Minimum base (inches)	18	18	18
Wearing surface (inches) - Gravel	6	6	6
Wearing surface (inches) - Paving	2	2	2
Maximum length	None	None	None
Maximum grade	10%	10%	10%
Minimum grade	0.5%	0.5%	0.5%
Minimum center-line radius (feet)	100	100	100
Minimum tangent between curves of reverse alignment (feet)	50	50	50
Minimum angle at street intersections	60°	60°	60°
Turnaround at dead end	**T**	**T**	**T**

*** For columns 1 and 2 in Table 8.2:**

1) Vehicle turnout(s) or turnaround providing space for two vehicles to pass or turnaround shall be specified by the Road Commissioner/Code Enforcement Officer if necessary due to the length of the private way or configuration of the travel way.
2) Existing private streets must conform to the chart as the number of residences increases on the private street working from the last residence to the start of the private street.

a. Where a proposed private street will be located adjacent to lots with existing structures that are not part of the development that will be served by the proposed private street, the traveled portion of the private street shall be located in a manner that retains an undeveloped portion of the street adjacent to the existing structures, with such undeveloped portion including an effective landscaped buffer.

b. Private streets shall be inspected by the Road Commissioner or Code Enforcement officer, unless it is determined physical conditions such as stream crossings or wetland areas require inspection by a registered professional engineer or other qualified land use professional. Prior to the issuance of building permits for lots served by a private street, the Road Commissionershall certify to the Code Enforcement Officer that the private street(s) has been constructed in accordance with this section. The applicant shall be responsible for the cost of each inspection by a registered professional engineer.

c. **Fees**.
   1) To help recover costs incurred by the Town in the review, administration, site inspection, and public notice associated with the private street application, at the time

of filing the private street application, the applicant shall pay to the Town fees and deposits in such amount(s) and for such purpose(s) as the Select Board may from time to time establish.

d. The Code Enforcement Officer and the Road Commissioner shall review and approve applications for private streets in writing to ensure they meet all standards when they do not trigger a Planning Board review. Such decisions may be appealed by filing a written notice ofappeal stating the reasons therefor with the North Yarmouth Zoning Board of Appeals within 30 days of the date of decision.

e. The provisions of this section shall not apply to private roads within a mobile homepark.

I. **New and Existing Private Road Waiver Requirements:** The Planning Board may waive private roadrequirements if the following items apply:

1. The applicant can provide substantial proof to the Planning Board that the road being constructedon the parcel being developed can never and will never be expanded in any manner due to a uniquesituation and the proposed road can serve the developed property and its full potential.

2. The waiver, if granted, does not and will not adversely affect the continuing development of community or surrounding parcels of land as a direct result of the waiver.

3. A 20' roadway would have a negative environmental impact on the property being developed or surrounding properties. This item must be supported by a design professional.

4. A waiver will be limited to road width and dimensional standards per Table 2 of this section.

5. This applies to all private streets proposed to be created after the effective date of this amendmentand to existing private streets upon which one more new dwelling units are proposed to be constructed after the effective date of this amendment.

J. **Road and Driveway Entrances**

1. **Applicability:** No person may build or construct a driveway or road that provides access to a public road without first obtaining a Driveway/Road Entrance Permit from the Code Enforcement Officer in accordance with this section. Any driveway or road serving a subdivision or development listedin Section VII. Zoning District Regulations, Table 7-1. Land Uses by District as requiring Site Plan Review must meet the requirements of Section VIII & X.

2. **Maine Department of Transportation (MDOT) Permit:** A copy of a MDOT Driveway or Entrance Permit, if applicable, must be presented with any application for a town Driveway/Road Entrance Permit.

3. **Safe Sight Distances**:

a. Access shall be designed in profile and grading and located to achieve the required sight distance measured in each direction along the public road while maintaining adequate distances from adjacent driveways/roads and intersections.

1) Sight distance is measured to and from the point on the centerline of the proposed access that is located ten (10) feet from the edge of traveled way. The height of

the hypothetical person's view is considered to be three and a half (3½) feet above the payment and the height of the object being viewed is considered to be four and a half (4½) feet above the pavement.

b. Driveway/ road and intersection road placement shall be such that an existing vehicle has anunobstructed sight distance according to the following schedule:

Table 8.3

Safe Sight Distances	
Highway Speed (MPH)	**Minimum Sight Distance (Feet)**
20	155
25	200
30	250
35	305
40	360
45	425
50	495
55	570
60	645
Source: MDOT Access Management Standards	

4. **Site triangle** shall be maintained twenty five (25) feet in length on each side of the intersection of the drivewayand the Public Street or road right-of-way line, with the third side connecting the other two sides. Within each sight triangle, no landscape plants, trees, other than low growing shrubs shall be planted. These shrubs must be no more than thirty (30) inches in height above the driveway elevation. Signage must not obstruct the view of oncoming traffic.

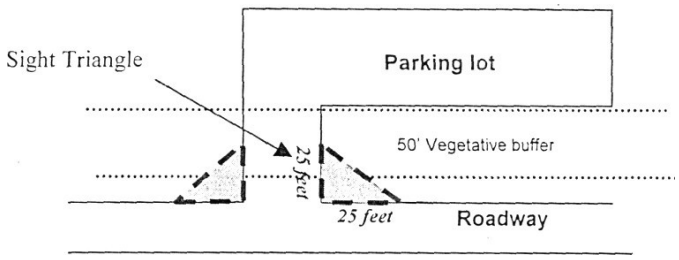

5. **Access Management and Safety Standards.** Driveway/ road and private-right-of-way access points to public road shall be limited as follows:

a. Points of access and egress must be located to avoid hazardous conflicts with existing turningmovements and traffic flows.

b. The number of access/egress points to a public road (each side of the public road treatedseparately) shall be as follows:

1) Limited to one access/egress point for every two hundred (200) feet or one access point per lot, in the **Farm and Forest District, Residential Shoreland District and Resource Protection** District, whichever is less.

2) Limited to one access point for every one hundred and fifty (150) feet, or one access point per lot in the **Village Center District and Village Residential District**, whichever is less.

c. **Shared Driveways/Roads:** Shared driveways/roads shall be encouraged for adjacent sites, in order to minimize the number of driveways along public roads. The CEO may allow for a reduction in the minimum frontage requirement by 10 percent when the applicant agrees to provide a common driveway/right-of-way for multiple lots and/or uses.

d. **Corner Lot Access:** Where a lot has frontage on two or more streets, the access/egress to thelot shall be provided to the lot across the frontage and to the street where there is lesser potential for traffic congestion and for hazards to traffic and pedestrians. This requirement maybe waived where the applicant demonstrates that existing site conditions preclude the locationof the driveway to the street where there is lesser potential for traffic congestion and for hazardsto traffic and pedestrians, or that the location of the driveway/road to the street where there is lesser potential for traffic congestion and for hazards to traffic and pedestrians would negativelyimpact a predominately residential neighborhood.

e. **Driveway Turn-Around Area:** After the effective date of this Ordinance (June 14, 2005), all future driveways/roads shall be designed with sufficient vehicle turn-around area to enable a driver to exit the premises without backing into the public street.

f. **Driveway or Road Grades:** The grade of any proposed driveway or road must be not more than ±3 percent for a minimum of forty (40) feet, from an intersection.

g. **Access way Location and Spacing**: Access ways must meet the following requirements:

1) New public and private accesses/egresses must be located at least fifty (50) feet from the closest unsignalized intersection and one hundred and fifty (150) feet from the closest signalized intersection, as measuredfrom the point of tangency for the corner to the point of tangency for the access way. This requirement may be reduced if the shape of the site does not allow conformance with this standard and the applicant demonstrates a hardship as required in 5.g.3) below.

2) New public and private accesses/egresses must be located at least fifty (50) feet from existing private roads, as measured from the point of tangency for the corner to the point of tangencyfor the access way. This requirement may be reduced if the shape of the site does not allow conformance with this standard and the applicant demonstrates a hardship as required in 5.g.3) below.

3) **Demonstration of Hardship:** The Planning Board may approve a reduction in the access/egress way location and spacing requirements in 5.g.1) and 2) above when the applicant demonstrates that the shape of the lot and the location of existing roads does notallow conformance with the standards, and that there is no other alternative other than a reduction in the access way location and spacing requirements. The applicant must submita site plan, done to scale, that demonstrates that all alternatives for meeting theserequirements have been explored and that without a reduction in the location and spacing,driveway access would not be possible.

SECTION 8.5 EROSION AND SEDIMENTATION CONTROL

All site alterations must harmonize with existing topography and conserve desirable natural surroundings to the fullest extent possible, such that filling, excavation and earth moving activity must be kept to a minimum. Natural vegetation must be preserved and protected wherever possible. Erosion of soil and sedimentation of watercourses and water bodies shall be minimized by employing the best management practices of the “Maine Erosion and Sediment Control Handbook for Construction: Best Management

Practices" by the Cumberland County Soil and Water Conservation District, most recent edition.

SECTION 8.6 SEWAGE DISPOSAL

All subsurface sewage disposal systems shall be installed in conformance with the State of Maine Subsurface Wastewater Disposal Rules (Rules). The applicant shall submit evidence of site suitability for subsurface sewage disposal prepared by a Maine Licensed Site Evaluator in full compliance with the requirements of the Rules. When sewage disposal is to be accomplished by sub-surface sewage disposal systems, test pit analysis, prepared by a licensed Site Evaluator shall be provided. A map indicating the location of all test pits dug on the site shall be submitted.

SECTION 8.7 SIGNS [AMENDED 5/17/08; 6/17/24]

A. General requirements.
   a. The size, location, design, color, texture, lighting and materials of all exterior signs and outdoor advertising structures or features shall not detract from the design of proposed buildings and structures and the surrounding properties and shall not constitute hazards to vehicles and pedestrians. All materials, illumination colors, lettering styles, locations of signs on the site or building shall be consistentwith and proportional to the structures on the site. Signs shall be located so as not to create a hazard or impediment to visibility, particularly at intersections. [Amended 6/18/11]

B. **Specific requirements**.

1. In the Village Center District signs should be compatible with the village character, and placed on the building, unless the sign would not be reasonably visible from the road in which situation a freestanding sign is an option.

2. **Signs in the Resource Protection District and the Residential Shoreland District** shall also meet the requirements in Section 9.1 Residential Shoreland District and Resource Protection District Performance Standards.

3. Signs shall relate to the premises on which they are located and shall only identify the occupant ofthe premises or advertise the service available within the premises.

4. No signs shall be erected prior to obtaining a permit.

5. Signs for each building, or single business with multiple buildings shall be no larger than twenty-four (24) square feet in area.

6. Signs shall not be installed above the roofline of a building. The top edge of any freestanding signshall not be higher than twenty (20) feet vertical measure above the grade of the street nearest the sign support(s).

7. For traffic safety, where vision may be obscured entering a public or private road, the whole of thesign board or display elements of any freestanding sign shall be either below three (3) feet in height or above then (10) feet in height of the road grade. A freestanding sign may be located within the front yardspace, but as not to create a traffic hazard. Freestanding signs shall not be located within the streetright-of-way.

8. Any sign that is attached to a structure, which overhangs a pedestrian walkway or public sidewalk,shall not extend beyond 5 feet of the structure face to which it is attached.

9. All signs shall be properly maintained. Any sign now or hereafter existing that no longer advertises a bona fide business conducted, an activity or campaign, shall be taken down and

removed by the owner, agent, or person having the beneficial use of the building structure, or lot. Within ten (10) days after written notification from the CEO and, upon failure to comply with such notice within the time specified in such order, the CEO is hereby authorized to cause removal of such sign, and any expense incident thereto shallbe paid by the owner of the building, structure, or lot to which such sign is attached.

10. Signs may be illuminated by shielded, non-flashing, non-moving lights. Internally illuminated signsare prohibited. All lighting must be angled and shielded so that it does not directly illuminate adjacent properties. All exterior lighting (including signage lighting) shall be turned on no earlier than one hour before opening of business and turned off no later than one hour after the closing ofbusiness, except for necessary security lighting approved by the CEO or Planning Board. All lightingshall comply with the standards set forth in Section 10.9 Exterior Lighting.

11. **Home Occupation Signs:** Signage shall be limited to one sign identifying the name. address and profession of the home occupation, providing that the sign does not exceed four (4) square feet in area, is non-illuminated, and is mounted either flat against the wall of the principal building or on a post, providing the sign does not extend into the public road limits. Signs, exterior displays and any other indications of a home-based occupation in a residential zone require conditional use approval by the Planning Board [Amended 5/30/09].

C. **Exempt signs: The following temporary signs shall not require a permit or other approval**:

1. **Special Event Signs:** Special event signs shall be allowed with written permission from the property owner as long as these signs are erected no sooner than four (4) weeks prior to the event beingadvertised. All special event signs must be removed within one week following the event being advertised. Such signs shall be located and erected so as not to create a traffic hazard.

2. Contractor signs: One sign each for a building contractor, architect or engineer, each sign shall not exceed sixteen (16) square feet, relating to construction projects. Such sign shall be removed within one (1) week after construction is complete.

3. Subdivision marketing signs: Subdivisions may have one non-internally lit sign at each public entrance to the development not to exceed thirty-two (32) square feet per sign.

4. Real estate signs: One sign not exceeding sixteen (16) square feet relating to the sale, rental or lease of the premises. Such sign shall be removed within one (1) week after the completion of the property transaction.

5. Political signs are allowed in accordance with State law, except as follows: political signs are prohibited from being placed on the following Town owned properties: **Town Office-** located at 10Village Square Road – tax map 7 lot 64; **Fire Station** - located between Routes 9 & 115 (463 Walnut Hill Road and Memorial Highway) – tax map 7 lot 66; **Public Works Garage**- located at 40Parsonage Road- tax map 7 lots 84 & 92; **Wescustogo Hall** – located at 475 Walnut Hill Road tax map 7 lot 64: **Veterans Memorial Park** – located at the corner of Memorial Highway andParsonage Road – tax map 7 lot 76.

D. **Nonconforming Signs:** All nonconforming signs may continue to be used and maintained. When nonconforming signs are replaced, they must be replaced with signs that conform to all requirements in this section of the ordinance.

E. Maintenance and basis for revocation: All signs shall be properly maintained. The CEO may revoke anypermit for a sign not properly maintained. Any signs not properly maintained, any sign now or hereafter existing that:

1. no longer advertises a bona fide business conducted,

2. an activity or campaign,

3. or is not exempt or a permitted non-conforming sign,shall be taken down and removed by the owner, agent, or person having the beneficial use of the building structure, or lot. Within ten (10) days after written notification from the CEO that such sign should be removed, and, upon

   failure to comply with such notice within the time specified in such order, the CEO is hereby authorized to cause removal of such sign, and any expense incident thereto shall be paid by the owner of the building, structure, or lot to which such sign is attached.

SECTION 8.8 STORM WATER CONTROL

All new site alterations shall be designed to minimize storm water runoff from the site in excess of the natural pre-development conditions. Adequate provisions must be made for the collection and disposal of all storm water that runs off proposed driveways, parking areas, roofs, and other surfaces to prevent adverse impacts on abutting or downstream properties. Existing runoff control features, such as berms, swales, terraces and wooded areas shall be retained where they reduce runoff and encourage infiltration of storm water. Storm water runoff control systems shall be maintained to ensure proper functioning.

SECTION 8.9 WATER QUALITY [AMENDED 6/17/24]

A. **Water Quality:** No activity shall deposit on or into the ground or discharge to the waters of the state any pollutant that,by itself or in combination with other activities or substances, will impair designated uses*,* including existingand potential groundwater supplies, or the water classification of the water body. No person shall locate, store, discharge, or permit the discharge of any treated, untreated, or inadequately treated liquid, gaseous,or solid materials of such nature, quantity, obnoxiousness, toxicity, or temperature that may run off, seep,percolate, or wash into surface or groundwaters so as to contaminate, pollute, or harm such waters or cause nuisances, such as objectionable shore deposits, floating or submerged debris, oil or scum, color, odor, taste, or unsightliness or be harmful to human, animal, plant or aquatic life.

B. **Groundwater Protection Overlay District:** All development and land use activities located within the Groundwater Protection Overlay District shall comply with the Section 9.2. Groundwater Protection OverlayDistrict: Best Management Standards.

C. Groundwater: Land use activities must not adversely impact either the quality or quantity of groundwater available to abutting properties or to public water supply systems. Applicants whose projects involve on-site water supply or sewage disposal systems with a capacity of two thousand (2,000) gallons per day or greater must demonstrate that the groundwater at the property line will comply, following development, with the standards for safe drinking water as established by the State of Maine. Ground water withdrawals by proposed land use activities shall not lower the water table beyond the boundaries of the development in a way that would impair or significantly diminish the permissible use of groundwater on land outside the development.

D. Wellhead Protection: No activity shall be sited so as to contaminate or otherwise negatively impact public or private water supplies. Proposed uses, such as junkyards, automobile graveyards, bulk storage of petroleum products, automobile repair and service stations must be located at least five hundred (500) feet from existing private and public water supplies. Underground fuel storage tanks must be located one thousand (1,000) feet from public water supply wells, and septic systems must be located at least three hundred (300) feet from public water supply wells. Any uses proposed to be located within the Groundwater Protection Overlay District must comply with the requirements of Section 9.2. Groundwater Protection Overlay District: Best Management Practices.

SECTION 8.10 WELLS

Individual wells shall be sited and constructed to prevent infiltration of surface water, and contamination from subsurface wastewater disposal systems and other sources of potential contamination. Lot design shall permit placement of wells and subsurface wastewater disposal areas in compliance with the Maine Subsurface Wastewater Disposal Laws. Due to the increased chance of contamination from surface water, new dug wells shall be prohibited on lots of smaller than one acre, unless evidence is presented by a certified hydrogeologist or similar expert assuring that a dug well can be safely utilized on the lot. New dug wells shall not be constructed within one hundred (100) feet of the traveled way of any public road if located downhill (where the average gradient is in excess of three percent [3%]) from the public road, or within fifty (50) feet of the traveledway of any public road if located uphill of the public road. This restriction shall be included as a note on theplan and deed restriction to the effected lots.

SECTION 8.11 ANIMAL HUSBANDRY

A. **Standards:** Animal husbandry for commercial purposes (see Section XII. Definitions) shall meet the following requirements:

1. Uncovered storage of manure shall be kept one hundred fifty (150) feet from the nearest residential dwelling other than the dwelling associated with the animal husbandry operation, and three hundred (300) feet from any body of water or well.

2. **Animal husbandry operations established after June 14, 2005:** When a new animal husbandry operation is established after June 14, 2005 in an area within 150 feet of a residential dwelling that was in existence prior to June 14, 2005, the Planning Board may limit

   the number andspecies of animals permitted and/or require a Nutrient Management Plan if there are complaints regarding the handling of manure, noise, odor and/or vermin problems. The Planning Board shall consider the size and layout of the lot, the size of adjacent lots, the presence of vegetative screening and buffer strips, and the potential for noise, odor and vermin problems.

B. **Groundwater Protection Overlay District:** Within the Groundwater Protection Overlay District, animalhusbandry shall also meet the following requirements:

1. A Nutrient Management Plan must be provided for all farming activities. Such a plan shall describehow animals will be kept within the area, (the number of animals will in any case not exceed 25 animal units (1 unit =1000 lbs of live animal weight) per ten (10) acres of land), or how manure will be spread (no more than fifty (50) tons of manure to be used per ten (10) acres).

2. Application of manures shall be tailored to the specific needs of the crop, as determined by soil suitability analyses.

3. Manures shall not be applied over very shallow soils (less than one (1) foot) or exposed bedrock.

4. Manure shall not be applied on frozen ground, or immediately before storm events.

5. Animal husbandry operations shall be pursuant to Section 9.2 Groundwater Protection Overlay District: Best Management Practices.

SECTION 8.12 FLOODPLAIN MANAGEMENT [AMENDED 6/17/24]

A. If any portion of the sire is located within a 100-year floodplain area as identified by the Federal Emergency Management Agency (FEMA) on the Flood Insurance Rate Maps and the Flood Hazard

BoundaryMaps (most recent versions), all use and development of that portion of the site must be consistent with the town's Floodplain Management Ordinance.

B. **Building Prohibited on Floodplains**:

1. Buildings are prohibited within the 100-year floodplain area as identified by FEMA on the town's Flood Insurance Rate Maps and Flood Hazard Boundary Maps. Identification of the 100-year floodplain shall be in accordance with the North Yarmouth Floodplain Management Ordinance.

2. The development plan should include a statement that building is prohibited on the 100-year floodplain, and the restriction shall be included in any deed, lease, purchase and sale agreement,or document transferring or expressing intent to transfer any interest in real estate orstructure.

3. 100-year floodplains may be used as woodlands, grasslands, pastureland and for passive outdoorrecreation.

4. Piers, docks, wharves, bridges and boat ramps and associated parking are permitted within the 100-year floodplain pursuant to Section 9.1. Residential Shoreland District and Resource Protection District Performance Standards subsection E, and the town's Floodplain Management Ordinance.

IX. SPECIAL DISTRICT STANDARDS

SECTION 9.1 RESIDENTIAL SHORELAND DISTRICT AND RESOURCE PROTECTION DISTRICT PERFORMANCE STANDARDS [AMENDED 5/17/08;6/19/21]

A. **Purpose:** The purpose of these standards is to further the maintenance of safe and healthful conditions;prevent and control water pollution; protect fish spawning grounds, aquatic life, bird and other wildlife habitat; protect buildings and lands from flooding and accelerated erosion; protect archaeological and historic resources; protect wetlands; control building sites, placement of structures and land uses; conserveshore cover, and visual as well as actual points of access to inland waters; conserve natural beauty and open space; and anticipate and respond to the impacts of development in shoreland areas. These districtsare established in accordance with the provisions of 38 M.R.S. Section 435 et seq. (Maine Mandatory Shoreland Zoning Act).

B. **Applicability:** Land use activities shall be reviewed on accordance with Section VII. Zoning District Regulations. All land use activities within the Residential Shoreland District and the Resource Protection District shall conform to the following provisions, if applicable.

C. **Review Criteria:** In approving any complete application, the permitting authority must make a positivefinding based on the information presented that the proposed use:

1. Will maintain safe and healthful conditions;

2. Will not result in water pollution, erosion, or sedimentation to surface waters;

3. Will adequately provide for the disposal of all wastewater;

4. Will not have an adverse impact on spawning grounds, fish, aquatic life, bird or other wildlife habitat;

5. Will conserve shore cover and visual, as well as actual, points of access to waters bodies;

6. Will protect archaeological and historic resources as designated in the Comprehensive Plan;

7. Will avoid problems associated with flood plain development and use; and

8. Is in conformance with all provisions of this Ordinance.

D. **Land Uses:** See Section VII. Zoning District Regulations Table 7.1. Land Uses by District.

E. **Maine Department of Environmental Protection Permits:** A person performing any of the following activities shall require a permit from the Department of Environmental Protection, pursuant to 38 M.R.S.,Section 480-C, if the activity occurs in, on, over, or adjacent to any wetland, river, stream or brook and operates in such a manner that material or soil may be washed into them:

1. Dredging, bulldozing, removing or displacing soil, sand, vegetation or other materials;

2. Draining or otherwise dewatering;

3. Any construction or alteration of any permanent structure.

F. **Minimum Lot Standards**:

1. The following minimum lot area and minimum shore frontage standards shall be applicable topermitted uses within the Residential Shoreland District and Resource Protection District:

Land Uses (Where permitted)	Minimum Lot Area	Minimum Shore Frontage
Residential - per dwelling unit	3 acres	200 feet
Governmental, Institutional, Commercial or Industrial - per principal structure*	3 acres	300 feet
Public and Private Recreational Facilities	3 acres	200 feet
*Most commercial and industrial uses are prohibited within the Residential Shoreland and Resource Protection Districts. See Section VII. Zoning District Regulations, Table 7.1. Land Uses by District.		

2. The following shall also apply:

   a. Land beneath roads serving more than two (2) lots shall not be included toward calculating minimumlot area. In addition, the following areas shall not be included toward calculating minimum lot area: (1) land below the normal high-water line of the Royal River, Chandler Brook and the EastBranch; (2) land below the high-water line of those sections of Toddy Brook, Pratt's Brook, DeerBrook and the unnamed tributary to Chandler Brook; and (3) land below the upland edge of Knight's Pond or the Deer Brook Wetland.

   b. Lots located on opposite sides of a public or private road shall be considered each a separatetract or parcel of land unless such road was established by the owner of the land on both sidesthereof after September 22, 1971.

   c. The minimum width of any portion of any lot within one hundred (100) feet, horizontal distance, of the normalhigh water line of the Royal River, Chandler Brook, the East Branch, or the sections of Toddy Brook, Deer Brook, Pratt's Brook or the unnamed tributary to Chandler Brook, or within one hundred (100) feet, horizontal distance, of the upland edge of Knight's Pond or the Deer Brook wetland, shallbe equal to or greater than the shore frontage requirement for a new lot with the proposed use.

   d. If more than one residential dwelling unit, principal governmental, institutional, commercial or industrial structure, or use, or combination thereof, is constructed or established on a single parcel, all dimensional requirements shall be met for each additional dwelling unit, principal structure, or use.

G. **Principal and Accessory Structures**:

1. All new principal and accessory structures shall be set back at least two hundred and fifty (250) feet, horizontal distance,from the normal high-water line of the Royal River, Chandler Brook and the East Branch, except for structures, roads, parking spaces or other regulated objects specifically allowed in which casethe setback requirement shall be one hundred (100) feet, horizontal distance from the normal high water line. Allnew principal and accessory structures shall be set back at least one hundred and fifty (150) feet, horizontal distance, fromthe normal high-water line of the sections of Deer Brook, Toddy Brook, Pratt's Brook and an unnamed tributary to Chandler Brook, at least one hundred and fifty (150) feet, horizontal distance, from the upland edgeof Knight's Pond and the Deer Brook wetland; and at least one hundred (100) feet, horizontal distance, from the normal high-water line of tributary streams. In addition, these setback provisions shall neither apply to structures that require direct access to the aforementioned bodies of water as an operational necessity, such as piers, docks and retaining walls, nor to other functionally water- dependent uses.

2. Principal or accessory structures and expansions of existing structures that are permitted shall not exceed thirty (35) feet in height. This provision shall not apply to structures such as transmission towers, windmills, antennas, and similar structures having no floor area.

3. Principal and accessory structures are prohibited within the 100-year floodplain as identified by the Federal Emergency Management Agency. Expansions of existing structures within the 100-year floodplain are prohibited.

4. The total footprint of all structures, parking lots and other non-vegetated surfaces, within the these districts shall not exceed twenty (20) percent of the lot or a portion thereof, including land area previously developed.

5. Notwithstanding the requirements stated above, stairways or similar structures may be allowed with a permit from the CEO, to provide shoreline access in areas of steep slopes or unstable soils provided: that the structure is limited to a maximum of four (4) feet in width; that the structure does not extend below or over the normal high-water line of a water body[1] or below or over the upland edge of the Deer Brook wetland or Knight's Pond, (unless permitted by the Department of Environmental Protection pursuant to the Natural Resources Protection Act, 38 M.R.S., Section 480-C); and that the applicant demonstrates that no reasonable access alternative exists on the property.

H. **Piers, Docks, Wharves, Bridges and Other Structures and Uses Extending Over or Below the Normal High-Water Line of a Water Body or Within the Deer Brook Wetland or Knight's Pond**:

1. Access from shore shall be developed on soils appropriate for such use and constructed so as to control erosion.

2. The location shall not interfere with existing developed or natural beach areas.

3. The facility shall be located so as to minimize adverse effects on fisheries.

4. The facility shall be no larger in dimension than necessary to carry on the activity and be consistent with the surrounding character and uses of the area. A temporary pier, dock or wharf shall not be wider than six (6) feet for non-commercial uses.

5. No new structure shall be built on, over or abutting a pier, wharf, dock or other structure extending beyond the normal high-water line of a water body or within a wetland unless the structure requires direct access to the water as an operational necessity.

6. New permanent piers and docks shall not be permitted unless it is clearly demonstrated to the Planning Board that a temporary pier or dock is not feasible, and a permit has been obtained from the Department of Environmental Protection, pursuant to the Natural Resources Protection Act.

7. No existing structures built on, over or abutting a pier, dock, wharf or other structure extending beyond the normal high-water line of a water body or within a wetland shall be converted to residential dwelling units in any district.

8. Structures built on, over or abutting a pier, wharf, dock or other structure extending beyond the normal high-water line of a water body or within a wetland shall not exceed twenty (20) feet in height above the pier, wharf, dock or other structure.

[1] Water Body: Any river or stream with Resource Protection zoning to include the Royal River, Chandler Brook, the East Branch, and sections of Toddy Brook, Pratt's Brook, Deer Brook, and an unnamed tributary to Chandler Brook, as depicted on the Zoning Map.

I. **Campgrounds:** Campgrounds are prohibited in the Resource Protection District. Campgrounds within the Residential Shoreland District shall conform to the minimum requirements imposed under statelicensing procedures and the following:

1. Campgrounds shall contain a minimum of five thousand (5,000) square feet of land, not including roads and driveways, for each site. Land supporting wetland vegetation, and land below the normal high- water line of a water body shall not be included in calculating land area per site.

2. The areas intended for placement of a recreational vehicle, tent or shelter, and utility and service buildings shall be set back at least two hundred and fifty (250) feet, horizontal distance, from the normal high-water line ofthe Royal River, Chandler Brook and the East Branch; at least one hundred and fifty (150) feet, horizontal distance, from the normal high-water line of other water bodies, at least one hundred and fifty (150) feet, horizontal distance, from the upland edge of the Deer Brook wetland and Knight's Pond; and at least one hundred (100) feet, horizontal distance, from the normal high-water line of tributary streams.

J. **Individual-Private Campsites:** Individual, private campsites not associated with campgrounds arepermitted provided the following conditions are met:

1. One campsite per lot existing on the effective date of this Ordinance, or thirty thousand (30,000) square feet of lot area within the Residential Shoreland District or Resource Protection District, whichever is less, may be permitted.

2. Campsite placement on any lot, including the area intended for a recreational vehicle or tent platform, shall be set back one hundred (100) feet horizontal distance, from the normal high-water line of a waterbody[1], tributary streams, or the upland edge of the Deer Brook wetland or Knight's Pond.

3. Only one recreational vehicle shall be allowed on a campsite. The recreational vehicle shall not belocated on any type of permanent foundation except for a gravel pad, and no structure except a canopy shall be attached to recreational vehicles.

4. The clearing of vegetation for the siting of the recreational vehicle, tent or similar shelter in a Resource Protection District shall be limited to one thousand (1,000) square feet.

5. A written sewage disposal plan describing the proposed method and location of sewage disposal shall be required for each campsite and shall be approved by the Local Plumbing Inspector. Wheredisposal is off-site, written authorization from the receiving facility or landowner is required.

6. When a recreational vehicle, tent or similar shelter is placed on-site for more than one hundred twenty (120) days per year, all requirements for residential structures shall be met, including the installation of a subsurface sewage disposal system in compliance with the *State of Maine Subsurface WastewaterDisposal Rules* unless served by public sewage facilities.

7. Camping on town park or recreation land is regulated by the Town of North Yarmouth Parks and Recreation Area Use and Regulation Ordinance. [Amended 6/18/11]

[1] Water Body: Any river or stream with Resource Protection zoning to include the Royal River, Chandler Brook, the East Branch, and sections of Toddy Brook, Pratt's Brook, Deer Brook, and an unnamed tributary to Chandler Brook, as depicted on the Zoning Map.

K. **Parking Areas:**

1. Parking areas shall meet the shoreline and tributary stream setback requirements for structures forthe district in which such areas are located. The setback requirement for parking areas serving public boat launching facilities shall be no less than fifty (50) feet, horizontal distance, from the shoreline or tributary stream if the Planning Board finds that no other reasonable alternative exists further from the shoreline or tributary stream.

2. Parking areas shall be adequately sized for the proposed use and shall be designed to prevent storm water runoff from flowing directly into a water body, tributary stream or wetland and where feasible, to retain all runoff on-site.

3. In determining the appropriate size of proposed parking facilities, the following shall apply:

   a. Typical parking space: approximately nine (9) feet wide and eighteen (18) feet long, Parking spaces for a vehicle and boat trailer shall be forty (40) feet long.

   b. Internal travel aisles: approximately twenty (20) feet wide.

L. **Roads and Driveways:** The following standards shall apply to the construction of roads and/ordriveways and drainage systems, culverts and other related features in RP or Shoreland Zone

1. Roads and driveways shall be set back at least at least two hundred and fifty (250) feet, horizontal distance, from the normal high-water line of the Royal River, Chandler Brook and the East Branch; at least one hundred fifty (150) feet, horizontal distance, from the normal high-water line of other water bodies; at least one hundred fifty (150) feet, horizontal distance, from the normal high-water line of the Deer Brook wetland and Knight's Pond;and at least one hundred (100) feet, horizontal distance, from the normal high-water line of tributary streams, unless no reasonable alternative exists as determined by the Planning Board. If no other reasonable alternative exists, the road and/or driveway setback requirement to no less than 100 feet, horizontal distance, upon clear showing by the applicant that appropriate techniques will be used to prevent sedimentation of the water body, tributary stream, or wetland. Such techniques may include, but are not limited to, the installation of settling basins, and/or the effective use of additional ditch relief culverts and turnouts placed so as to avoid sedimentation of the water body,tributary stream, or Deer Brook or Knight's Pond. On slopes of greater than twenty percent (20%) the road and/or driveway setback shall be increased by 10 feet, horizontal distance, for each 5 percent increase in slope above twenty percent (20%). This paragraph does not apply to approaches to water crossings or to roads or driveways that provide access to permitted structures and facilities locatednearer to the shoreline or tributary stream due to an operational necessity, excluding temporary docks for recreational uses. Roads and driveways providing access to permitted structures within the setback area shall comply fully with the requirements of this paragraph except for that portion of the road or driveway necessary for direct access to the structure.

2. Existing public roads may be expanded within the legal road right-of-way regardless of their setbackfrom a water body, tributary stream, or the Deer Brook wetland or Knight's Pond.

3. New roads and driveways are prohibited in a Resource Protection District except that the PlanningBoard may grant a permit to construct a road or driveway to provide access to permitted uses withinthe district. A road or driveway may also be approved by the Planning Board in a Resource Protection District, upon a finding that no reasonable alternative route or

location is available outside the district. When a road or driveway is permitted in a Resource Protection District the roadand/or driveway shall be set back as far as practicable from the normal high- water line of water bodies, tributary streams, or the upland edge of the Deer Brook wetland or Knight's Pond.

4. Road and driveway banks shall be no steeper than a slope of two (2) horizontal to one vertical and shall be graded and stabilized in accordance with the provisions for erosion and sedimentation control contained in Section VII. Section 8.5.

5. Road and driveway grades shall be no greater than ten percent (10%) except for segments of less than two hundred (200) feet.

6. In order to prevent road and driveway surface drainage from directly entering water bodies, tributary streams or wetlands, roads and driveways shall be designed, constructed, and maintained to emptyonto an unscarified buffer strip at least fifty (50) feet plus two times the average slope, in width betweenthe outflow point of the ditch or culvert and the normal high-water line of water bodies, tributary streams, or the upland edge of the Deer Brook wetland or Knight's Pond. Surface drainage which is directed to an unscarified buffer strip shall be diffused or spread out to promote infiltration of therunoff and to minimize channelized flow of the drainage through the buffer strip.

7. Ditch relief (cross drainage) culverts, drainage dips and water turnouts shall be installed in a manner effective in directing drainage onto unscarified buffer strips before the flow gains sufficientvolume or head to erode the road, driveway or ditch. To accomplish this, the following shall apply:

   a. Ditch relief culverts, drainage dips and associated water turnouts shall be spaced along the road, or driveway at intervals no greater than indicated in the following table:

Grade (Percent)	0-2%	3-5%	6-10%	11-15%	16-20%	21+%
Spacing (Feet)	250 ft	200-135 ft	100-80 ft	80-60 ft	60-45 ft	40 ft

   b. Drainage dips may be used in place of ditch relief culverts only where the grade is 10 percent or less.

   c. On sections having slopes greater than ten percent (10%), ditch relief culverts shall be placed at approximately a thirty (30) degree angle down slope from a line perpendicular to the centerline of theroad or driveway.

   d. Ditch relief culverts shall be sufficiently sized and properly installed in order to allow for effectivefunctioning, and their inlet and outlet ends shall be stabilized with appropriate materials.

8. Ditches, culverts, bridges, dips, water turnouts and other storm water runoff control installations associated with roads and driveways shall be maintained on a regular basis to assure effective functioning.

M. **Signs:** The following provisions shall govern the use of signs in a Resource Protection District or a Residential Shoreland District:

1. Signs relating to goods and services sold on the premises shall be permitted, provided that such signs shall not exceed 6 square feet in area and shall not exceed two (2) signs per premises. Signs relating to goods or services not sold or rendered on the premises shall be prohibited.

2. Name signs shall be permitted, provided such signs shall not exceed two (2) signs per premises, and shall not exceed twelve (12) square feet in the aggregate.

3. Residential users may display a single sign not over three (3) square feet in area relating to the sale, rental,or lease of the premises.

4. Signs relating to trespassing and hunting shall be permitted without restriction as to number provided that no such sign shall exceed two (2) square feet in area.

5. Signs relating to public safety shall be permitted without restriction.

6. No sign shall extend higher than twenty (20) feet above the ground.

7. Signs may be illuminated only by shielded, non-flashing lights.

N. **Storm Water Runoff:** All new construction and development shall be designed to minimize storm waterrunoff from the site in excess of the natural predevelopment conditions. Where possible, existing natural runoff control features, such as berms, swales, terraces and wooded areas, shall be retained in order to reduce runoff and encourage infiltration of storm waters. Storm water runoff control systems shall be maintained as necessary to ensure proper functioning.

O. **Septic Waste Disposal:** All subsurface sewage disposal systems shall be installed in conformance with the *State of Maine Subsurface Wastewater Disposal Rules.*[1], and the following: a) clearing or removalof woody vegetation necessary to site a new system and any associated fill extensions, shall not extend closer than one hundred (100) feet, horizontal distance, from the normal high-water line of a water body or the upland edge of the Deer Brook wetland and Knight's Pond; and b) a holding tank is not allowed for a first-time residential use in the Residential Shoreland District or Resource Protection District.

P. **Essential Services:** Where feasible, the installation of essential services shall be limited to existing public ways and existing service corridors. The installation of essential services, other than road-side distribution lines, is not permitted in a Resource Protection District, except to provide services to a permitted use within said district, or except where the applicant demonstrates that no reasonablealternative exists. Where permitted, such structures and facilities shall be located so as to minimize any adverse impacts on surrounding uses and resources, including visual impacts. Damaged or destroyed public utility transmission and distribution lines, towers and related equipment may be replaced or reconstructed without a permit.

Q. Mineral Exploration and Extraction:

1. Mineral exploration to determine the nature or extent of mineral resources shall be accomplished by hand sampling, test boring, or other methods which create minimal disturbance of less than one hundred (100) square feet of ground surface. All commercial operations exceeding above limitation require review and permitting by Maine State Department of Environmental Protection (DEP). All excavations, including test pits and holes shall be immediately capped, filled or secured by other equally effective measures, to restore disturbed areas and to protect the public health and safety.

[1]The Rules require new systems, excluding fill extensions, to be constructed no less than 100 horizontal feet from the normal high-water line of a perennial water body. The minimum setback distance for new subsurface sewage disposal system may not be reduced by variance.

2. Mineral extraction within the Resource Protection District or Residential Shoreland District is defined as any operation that involves the excavation, processing, and/or storage of more than 100cubic yards of soil, topsoil, loam, sand, gravel, clay, rock, peat, or other like material within any twelve (12) month period. Mineral extraction is prohibited in the Resource Protection District. Mineral extractionmay be permitted as a Conditional Use in the Residential Shoreland District under the following conditions:

    a. A reclamation plan shall be filed with, and approved by the Planning Board before a permit is granted. Such plan shall describe in detail procedures to be undertaken to fulfill the requirements of subsection c. below.

    b. No part of any extraction operation, including drainage and runoff control features shall be permitted within a Resource Protection District.

    c. Within 12 months following the completion of extraction operations at any extraction site, whichoperations shall be deemed complete when less than one hundred (100) cubic yards of materials are removedin any consecutive twelve (12) month period, ground levels and grades shall be established in accordance with the following:

        1) All debris, stumps, and similar material shall be removed for disposal in an approved location, or shall be buried on-site. Only materials generated on-site may be buried or covered on-site.

        2) The final graded slope shall be two and one half to one (2 ½: 1) slope or flatter.

        3) Topsoil or loam shall be retained to cover all disturbed land areas, which shall be reseeded and stabilized with vegetation native to the area. Additional topsoil or loam shall be obtained from off-site sources if necessary to complete the stabilization project.

3. In keeping with the purposes of this Ordinance, the Planning Board may impose such conditions as are necessary to minimize the adverse impacts associated with mineral extraction operations on surrounding uses and resources.

4. Mineral Exploration and Extraction activities must also meet the requirements of Section 11.8. Extraction of Earth Materials (Mineral Extraction).

R. **Agriculture**:

1. All spreading or disposal of manure shall be accomplished in conformance with the most current edition of the *Manure Utilization* published by the Maine Department of Agriculture, Conservation & Forestry and the Nutrient Management Act (7 M.R.S. §§ 4201-4214).”,

2. Manure shall not be stored or stockpiled within one hundred (100) feet, horizontal distance, from the normal high-water line of the water body[1] or the upland edge of the Deer Brook Wetland or Knight’s Pond. All manure storage areas within a Residential Shoreland District or a Resource Protection Districtmust be constructed or modified such that the facility produces no discharge of effluent or contaminated storm water.

[1] Water Body: Any river or stream with Resource Protection zoning to include the Royal River, Chandler Brook, the East Branch, and sections of Toddy Brook, Pratt’s Brook, Deer Brook, and an unnamed tributary to Chandler Brook, as depicted on the Zoning Map.

3. Agricultural activities involving tillage of soil greater than forty thousand (40,000) square feet in surface area, within a Residential Shoreland District or a Resource Protection District shall require a Conservation Plan to be filed with the Planning Board. Non-conformance with the provisions of said plan shall be considered to be a violation of this Ordinance.

4. There shall be no new tilling of soil within one hundred (100) feet from the normal high-water line of a water body, nor within twenty-five (25) feet, horizontal distance, of tributary streams, the Deer Brook wetland or Knight's Pond. Operations in existence on the effective date of this Ordinance and not in conformance with this provision may be maintained.

5. Newly established livestock grazing areas shall not be permitted within 100 feet from the normal high-water line of a water body, nor within twenty-five (25) feet, horizontal distance, of tributary streams, the Deer Brook wetland or Knight's Pond. Livestock grazing associated with ongoing farm activities, and which are not in conformance with the above setback provisions may continue, provided that such grazing is conducted in accordance with a Conservation Plan.

S. **Timber Harvesting**:

Timber harvesting shall conform to the following provisions:

1. Selective cutting of no more than forty percent (40%) of the total volume of trees four (4) inches or more in diameter measured at four and a half (4½) feet above ground level on any lot in any ten (10) year period is permitted. In addition:

   a. Within one hundred (100) feet, horizontal distance, from the normal high-water line of a water body, tributary streams, or the upland edge of the Deer Brook wetland or Knight's Pond there shall be no clearcut openings and a well-distributed stand of trees and other vegetation, including existing ground cover, shall be maintained.

   b. At distances greater than one hundred (100) feet, horizontal distance, from the normal high-water line of a water body, tributary streams, or the upland edge of the Deer Brook Wetland or Knight's Pond, harvesting operations shall not create single clearcut openings greater than ten thousand (10,000) square feet in the forest canopy. Where such openings exceed five thousand (5,000) square feet they shall be at least one hundred (100) feet apart. Such clearcut openings shall be included in the calculation of total volume removal. For the purposes of these standards volume may be considered to be equivalent to basal area.

2. Timber harvesting operations exceeding the forty percent (40%) limitation in Subsection S.1. above, may be allowed by the Planning Board upon a clear showing, including a forest management plan signed by a Maine licensed professional forester, that such an exception is necessary for good forest management and will be carried out in accordance with the purposes of this Ordinance. The Planning Board shall notify the Commissioner of the Department of Environmental Protection of each exception allowed, within fourteen (14) days of the Planning Board's decision.

3. No accumulation of slash shall be left within fifty (50) feet of the normal high-water line of a water body. In all other areas slash shall either be removed or disposed of in such a manner that it lies on the ground and no part thereof extends more than 4 feet above the ground. Any debris that falls below the normal high-water line of a water body shall be removed.

4. Timber harvesting equipment shall not use stream channels as travel routes except when:

   a. Surface waters are frozen; and

   b. The activity will not result in any ground disturbance.

5. All crossings of flowing water shall require a bridge or culvert, except in areas with low banks and channel beds which are composed of gravel, rock or similar hard surface which would not be erodedor otherwise damaged.

6. Skid trail approaches to water crossings shall be located and designed so as to prevent water runofffrom directly entering the water body or tributary stream. Upon completion of timber harvesting, temporary bridges and culverts shall be removed and areas of exposed soil re-vegetated.

7. Except for water crossings, skid trails and other sites where the operation of machinery used in timber harvesting results in the exposure of mineral soil shall be located such that an unscarified strip of vegetation of at least seventy (75) feet in width for slopes up to ten percent (40%) shall be retained betweenthe exposed mineral soil and the normal high-water line of the water body or upland edge of the Deer Brook wetland or Knight's Pond. For each ten percent (10%) increase in slope, the unscarified strip shall be increased by twenty (20) feet. The provisions of this paragraph apply only to a face sloping toward the water body, Deer Brook wetland or Knight's Pond, provided, however, that no portion of such exposed mineral soil on a back face shall be closer than twenty-five 25 feet from the normalhigh-water line of a water body or upland edge of the Deer Brook wetland or Knight's Pond.

T. **Clearing or Removal of Vegetation for Activities Other Than Timber Harvesting**:

1. In a Resource Protection District the cutting or removal of vegetation shall be limited to that whichis necessary for uses expressly authorized in that district.

2. Except in areas as described in number T.1, above, and except to allow for the development of permitted uses, within a strip of land extending one hundred (100) feet horizontal distance, from the normal high-water line of a water body, tributary streams, or the upland edge of the Deer Brook wetland or Knight's Pond, a buffer strip of vegetation shall be preserved as follows:

   a. There shall be no cleared opening greater than two hundred fifty (250) square feet in the forest canopy (or other existing woody vegetation if a forested canopy is not present) as measured from the outer limitsof the tree or shrub crown. However, a footpath not to exceed six (6) feet in width as measured between tree trunks and/or shrub stems is permitted provided that a cleared line of sight to thewater through the buffer strip is not created.

   b. Selective cutting of trees within the buffer strip is permitted provided that a well-distributed standof trees and other natural vegetation is maintained. For the purposes of this section (T.2.b) a "well-distributed stand of trees" is defined as maintaining a minimum rating score of 16 pointsper twenty-five (25) foot by fifty (50) foot (1,250 square feet) rectangular area as determined by the following ratingsystem.[1]

[1]As an example, if a 25-foot x 50-foot plot contains 4 trees between 2 and 4 inches in diameter, 2 trees between 4 and 8 inches in diameter, 3 trees between 8 and 12 inches in diameter, and 2 trees over 12 inches in diameter, the rating score is: (4x1) + (2x2) + (3x4) + (2x8) = 36 points. Thus, the 25-foot by 50-foot plot contains trees worth 36 points. Trees totaling 20 points (36 – 16 = 20) may be removed from the plot provided that no cleared openings are created.

Diameter of Tree at 4-1/2 feet Above Ground Level (inches)	2" to less than 4"	4" –to less than 8 "	8" to less than 12"	12" or greater
Points	1	2	4	8

For the purposes of Section T.2.b above, "other natural vegetation" is defined as retaining existing vegetation under 3 feet in height and other ground cover and retaining at least five (5) saplings less than two (2) inches in diameter at four and a half (4½) feet above ground level for each twenty (25) foot by fifty (50) foot rectangle area. If five (5) saplings do not exist, no woody stems less than two (2) inches in diameter can be removed until five (5) saplings have been recruited into the plot.

Notwithstanding the above provisions, no more than forty percent (40%) of the total volume of trees four (4) inches or more in diameter, measured at four and a half (4½) feet above ground level may be removed in any ten (10) year period.

c. In order to protect water quality and wildlife habitat, existing vegetation under three (3) feet in height and other ground cover, including leaf litter and the forest duff layer, shall not be cut, covered,or removed, except to provide for a footpath or other permitted uses as described in section T.2 and 2.a, above.

d. Pruning of tree branches, on the bottom 1/3 of the tree is permitted.

e. In order to maintain a buffer strip of vegetation, when the removal of storm-damaged, diseased, unsafe, or dead trees results in the creation of cleared openings, these openings shall be replanted with native tree species unless existing new tree growth is present.

Section T.2., above, does not apply to those portions of public recreational facilities adjacent to public swimming areas as long as cleared areas are limited to the minimum area necessary.

3. At distances greater than one hundred (100) feet horizontal distance, from the normal high-water line of a water body[1], tributary streams, or the upland edge of the Deer Brook wetland or Knight's Pond, there shall be permitted on any lot, in any ten (10) year period, selective cutting of not more than 40 percent of the volume of trees four (4) inches or more in diameter, measured four and a half (4½) feet above ground level. Tree removal in conjunction with the development of permitted uses shall be included in the fourty (40) percentcalculation. For the purposes of these standards volume may be considered to be equivalent to basal area.

4. In no event shall cleared openings for any purpose, including but not limited to, principal and accessory structures, driveways, lawns and sewage disposal areas, exceed in the aggregate, twenty five (25%) percent of the lot area within the Residential Shoreland District and/or Resource Protection Districtor 10,000 square feet, whichever is greater, including land previouslycleared.

5. Legally existing nonconforming cleared openings may be maintained, but shall not be enlarged, except as permitted by this Ordinance.

6. Fields and other cleared openings that have reverted to primarily shrubs, trees, or other woody vegetation shall be regulated under the provisions of this section (T).

[1] Water Body: Any river or stream with Resource Protection zoning to include the Royal River, Chandler Brook, the East Branch, and sections of Toddy Brook, Pratt's Brook, Deer Brook, and an unnamed tributary to Chandler Brook, as depicted on the Zoning Map.

U. **Erosion and Sedimentation Control**:

1. All activities that involve filling, grading, excavation or other similar activities which result in unstabilized soil conditions and which require a permit shall also require a written soil erosion and sedimentation control plan. The plan shall be submitted to the permitting authority for approval and shall include, where applicable, provisions for:

   a. Mulching and revegetation of disturbed soil.

   b. Temporary runoff control features such as hay bales, silt fencing or diversion ditches.

   c. Permanent stabilization structures such as retaining walls or rip-rap.

2. In order to create the least potential for erosion, development shall be designed to fit with the topography and soils of the site. Areas of steep slopes where high cuts and fills may be required shall be avoided wherever possible, and natural contours shall be followed as closely as possible.

3. Erosion and sedimentation control measures shall apply to all aspects of the proposed project involving land disturbance, and shall be in operation during all stages of the activity. The amount of exposed soil at every phase of construction shall be minimized to reduce the potential for erosion.

4. Any exposed ground area shall be temporarily or permanently stabilized within one week from thetime it was last actively worked, by use of riprap, sod, seed, and mulch, or other effective measures.In all cases permanent stabilization shall occur within nine (9) months of the initial date of exposure. In addition:

   a. Where mulch is used, it shall be applied at a rate of at least one bale per five hundred (500) square feet andshall be maintained until a catch of vegetation is established.

   b. Anchoring the mulch with netting, peg and twine or other suitable method may be required tomaintain the mulch cover.

   c. Additional measures shall be taken where necessary in order to avoid siltation into the water.Such measures may include the use of staked hay bales and/or silt fences.

5. Natural and man-made drainage ways and drainage outlets shall be protected from erosion from water flowing through them. Drainage ways shall be designed and constructed in order to carry water from a twenty-five (25) year storm or greater, and shall be stabilized with vegetation or lined with riprap.

V. **Soils:** All land uses shall be located on soils in or upon which the proposed uses or structures can be established or maintained without causing adverse environmental impacts, including severe erosion, mass soil movement, improper drainage, and water pollution, whether during or after construction. Proposed uses requiring subsurface waste disposal, and commercial or industrial development and other similar intensive land uses, shall require a soils report based on an on-site investigation and be prepared by state-certified professionals. Certified persons may include Maine certified soil scientists, Maine registered professional engineers, Maine certified geologists and other persons who have training and experience inthe recognition and evaluation of soil properties. The report shall be based upon the analysis of the characteristics of the soil and surrounding land and water areas, maximum ground water elevation, presence of ledge, drainage conditions, and other pertinent data that the evaluator deems appropriate. The soils report shall

include recommendations for a proposed use to counteract soil limitations where they exist.

W. **Water Quality:** No activity shall deposit on or into the ground or discharge to the waters of the state any pollutant that, by itself or in combination with other activities or substances, will impair designated usesor the water classification of the water body, tributary stream or Deer Brook wetland or Knight's Pond.

X. **Archaeological Site:** Any proposed land use activity involving structural development or soil disturbance on or adjacent to sites listed on, or eligible to be listed on the National Register of Historic Places, as determined by the permitting authority shall be submitted by the applicant to the Maine HistoricPreservation Commission for review and comment, at least thirty (30) days prior to action being taken by the permitting authority. The permitting authority shall consider comments received from the Commission priorto rendering a decision on the application.

SECTION 9.2 GROUNDWATER PROTECTION OVERLAY DISTRICT: BEST MANAGEMENT PRACTICES [AMENDED 6/17/24]

A. **Purpose:** The purpose of these provisions are to maintain and preserve critical groundwater resourcesassociated with existing and future public water supplies of the Yarmouth Water District. The protection ofgroundwater is critical to maintaining the health, safety and general welfare of the residents of North Yarmouth and other users of the public water supplies.

B. **Applicability**: All land use activities located within the Groundwater Protection Overlay District shall conform to these provisions. Land use activities shall be reviewed on accordance with Section VII. Zoning District Regulations. These standards are in addition to those of the underlying district. Where there are conflicts within the provisions of this Ordinance the more restrictive provisions shall apply.

Exemptions:

1. The review portions of this Section shall not apply to use and storage of normal quantities of household products. However, homeowners shall use best management practices and whatever means practical to insure that chemicals and nutrients do not get into thegroundwater.

2. The review portions of this Section shall not apply to essential operations of the Yarmouth Water District or other official safety or utility entities. However, these entities shall use best managementpractices and whatever means practical to insure that pollutants do not get into the groundwater.

C. **Monitoring and Follow-up:** The provisions of the Groundwater Protection Overlay District will be evaluated periodically based on need, with a complete re-evaluation no later than the year 2010, or whenthe total number of residential units within in that portion of the Groundwater Protection Overlay District that overlays the Village Center District and adjacent areas, approaches a total of 450 residential units. The Yarmouth Water District will install groundwater-monitoring wells to provide on-going data and analysis on the impacts of residential and other types of development on groundwater quality. The Code Enforcement Officer (CEO) will track the total number of residential units, and will consultant with the Yarmouth Water District at least once a year to discuss the groundwater monitoring results. The ground water monitoring data will be used to re-evaluate the maximum threshold of 450 residential units for this area, and the minimum lot size and density standards of these provisions.

D. **Restoration of Unsafe Property:** Nothing in this Section shall prevent the strengthening or restoringto safe condition any part of any structure or use declared unsafe by the CEO.

E. **Control of Existing Threats, Inspections and Monitoring:** The CEO shall have the right to enter andinspect all premises that carry on the land uses listed in Section VII. Zoning District Regulations Table 7-1.Land Uses by District, and any other uses that pose as a potential threat to groundwater due to their location in the Groundwater Protection Overlay District. A representative of the Yarmouth Water District, including a consultant, may accompany the CEO. Further, the CEO shall have the right, upon twenty-four (24) hour notice, to conduct such testing, as the town may deem appropriate to determine that best management practices and groundwater pollution control devices are in good condition and are working properly. Suchtesting shall be at the town or water district's expense. If such testing indicates that the groundwater has been contaminated above the State Primary or Secondary Drinking Water Standards, then further testingshall be at the expense of the existing owner of the land in question. Additionally, the owner shall reimbursethe town and/or the water district for expenses incurred in the initial well installation and testing. The townand the Yarmouth Water District shall have the right to install groundwater-monitoring wells and shall further maintain the right to sample such wells on properties within the Groundwater Protection Overlay District when the town or water district can clearly show that groundwater monitoring in the area will serveto protect the public water supply from existing or potential threats.

F. **Yarmouth Water District Assistance**: The town may request assistance in administering and enforcing the provisions of the Groundwater Protection Overlay District from the Yarmouth Water District. The town shall notify the Yarmouth Water District of all pending applications; the time, date, and place of Planning Board, CEO, Local Plumbing Inspector, Zoning Board of Appeals, or other local consideration of the application; and give the Yarmouth Water District an opportunity to review and comment on the proposal. The Yarmouth Water District or its designee may present evidence and comment before or during public hearings or meetings concerning development or activity in the Groundwater Protection Overlay District. A copy of correspondence relative to the proposal, such as complete application determinations, approvals, and plans, shall be sent to the Yarmouth Water District.

G. **Best Management Practices Required of All Development and Land Uses:** All development and land use activities, including development and land use activities in existence as of the date of adoption ofthese provisions (June 14, 2005), located within the Groundwater Protection Overlay District shall complywith the following Best Management Practices to protect the quality and quantity of the public water supply. Best Management Practices, as applied in the State of Maine, are management practices that will mitigate the impacts of the activity on water quality. In some instances, there may be more than one managementpractice that would accomplish the same result. In other instances, depending on the site location and on-site conditions, more than one management practice may be needed to fully mitigate the problem. Therefore, the CEO and the Planning Board shall use their discretion to determine which management practices apply, and in the case of existing development and land use activities, the timeframe for compliance. The Planning Board and CEO shall require all development located within the Groundwater Protection Overlay District to comply with the Best Management Practices contained in this Section and may refer to additional applicable Best Management Practices which have been published by or in conjunction with the Maine Drinking Water Program, Maine Department of Environmental Protection (DEP), or other technical experts.

H. **Best Management Practices**:

1. **Chemical Storage:** Chemical storage includes storage in tanks (above and underground), and indrums of different sizes. It can also include storage of solid chemicals in bags, or in bulk (in piles or silos). The principal chemicals of concern regarding groundwater contamination include petroleum products, solvents, agricultural chemicals (fertilizers, herbicides, fungicides, etc.), manure and road salt. Stored waste chemicals are also a concern. *(* These special provisions pertain to "large" facilities and storage units. Large is defined as inexcess of 275 lbs solid and 275 gallons liquid.)*

a. All chemicals shall be stored under cover, and on impervious working surfaces, without floor drains. Storage space shall be designed so that failures, emergencies, extreme storm events or routine site clearing will not cause material or wash water to run on the bare ground.

b. Secondary containment shall be designed to include impervious holding of fluids of at least twentypercent (20%) of the volume of storage of all liquid chemicals, and one hundred ten percent (110%) of the volume of the largest storage container, by permanent dikes or other means.

c. *Tanks for liquid storage shall be equipped with automatic shutoffs and high level alarms. Personnel shall be trained to respond to shutoffs and alarms.

d. All piping shall be designed to prevent line breakage by collision.

e. All containers and piping shall be secure and resistant to corrosion, and shall be clearly labeledwith name of chemical, and date of purchase (or generation of waste).

f. *A Spill Prevention, Containment and Countermeasure Plan (SPCC) shall be prepared under DEP guidance, and for submittal to the CEO, Fire Department and the Yarmouth Water District.This plan shall include provisions to prevent and catch spills during loading and transfer activities. This SPCC plan shall be reviewed and updated annually.

g. *All storage areas shall be inspected at least weekly, and an inventory and tracking system of inspections shall be maintained.

h. Adequate spill clean up materials must be kept on hand at the facility. Spills must be cleaned up promptly, and spilled materials disposed of properly.

i. “Pre-plans” for firefighting must be prepared bearing in mind the possibility that chemicals couldcause groundwater contamination if washed out of a burning building by water. Foam materialsand spray plans should be included in the plan, appropriate to the materials and quantities stored in the facility.

j. The DEP’s hazardous waste regulations must be followed.

k. Manure and ash and liming agents used for agricultural purposes must be stored under cover.

2. **Chemical Use:** Chemical use includes but is not limited to: combustion, degreasing and other cleaning, mixing and dilution with other chemicals or water, catalytic reactions, all with or without the production of a waste material. Some waste materials are recycled on a limited scale during the process. Types of chemicals include all those listed above under chemical storage, except foragricultural chemicals, manure and road salt.

a. Use non-hazardous chemicals whenever possible. If hazardous chemicals must be used, provide justification for why they cannot be replaced by non-hazardous chemicals.

b. Design chemical feed lines and temporary storage containers to prevent spillage by collision and corrosion.

c. Clearly label all storage vessels and chemical feed lines with chemical name.

d. Check for spillage and leaks at least weekly. Leaking containers must be removed or placed

in over-packs (secure containers that are larger than the leaking container).

e. Prepare a SPCC Plan under DEP guidance (see H.1. above). This plan shall include provisions for cleaning up small spills and containing large spills in emergency. Keep emergency cleanup materials on hand.

f. All spills must be promptly reported to DEP, the CEO and North Yarmouth Fire Department, and the Yarmouth Water District.

3. Chemicals and Organic Materials Spreading or Spraying: "Agricultural and Silvicultural" applies in this case to areas of greater than two (2) acres (includes transportation or utility corridors), or hoop/greenhouses, or nursery/garden shops greater than one thousand (1,000) square feet.

a. **Application of Agricultural and Silvicultural Chemicals**:

1) All pesticides and/or herbicides shall be applied in accordance with label directions and the regulations of the Maine Board of Pesticides Control.

2) Herbicides and pesticides must only be applied by trained personnel, i.e. by certified applicators, who must be informed regarding the delineated Groundwater Protection Overlay District.

3) All agricultural fertilizers shall be applied in accordance with label directions.

4) Fertilizer applications are to be tailored to the specific needs of the crop, as determined by soil suitability analyses. Use of slow-release fertilizers is preferred.

5) Irrigation schedules shall be coordinated with pesticide and nutrient application to minimize the possibility of leaching. Pesticides and fertilizers shall not be applied to frozen ground, or immediately before storm events.

6) Notice of intent to apply agricultural chemicals shall be given to the CEO and the Yarmouth Water District at least five (5) days prior to application.

b. **Spreading of Organic Materials in Agriculture**:

1) A Nutrient Management Plan must be provided for all farming activities. Such a plan shall describe how animals will be kept within the area, (the number of animals will in any case not exceed twenty (25) animal units (1 unit =1,000 lbs of live animal weight) per ten (10) acres of land),and/or how manure will be stored, handled and spread (no more than fifty (50) tons of manure to be used per ten (10) acres).

2) Application of manures shall be tailored to the specific needs of the crop, as determined by soil suitability analyses.

3) Manures shall not be applied over very thin soils (less than one (1) foot) or exposed bedrock.

4) Manure shall not be applied on frozen ground, or immediately before storm events.

4. **Road Maintenance, Parking Areas and Storm Water**:

a. Storm water from frequently used parking lots (e.g. for commercial establishments, and workplaces) shall be diverted away from the Groundwater Protection Overlay District, if possible, and shall not be channeled into bodies of water. Filter strips and vegetated areas

shall be installed and maintained wherever possible.

b. Storm water impoundments, detention basins and ponds shall be located outside the Groundwater Protection Overlay District whenever possible. These systems shall be inspectedfrequently and maintained in good working order.

c. The use of road salt, sand and chemicals should be minimized. Salts and chemical shall be stored away from water bodies or drainage swales, on an impermeable surface and covered with waterproof material.

d. Ditches and catch basis shall be inspected regularly to prevent excessive sediment build-up.

e. Snow shall not be dumped into bodies of water.

f. Oil shall not be used on roads. Water may be used to control dust.

g. Vehicles transporting or storing hazardous materials (other than fuel to operate the vehicle) shall not park in the Groundwater Protection Overlay District overnight, unless in a secure, contained area. The CEO, Yarmouth Water District and North Yarmouth Fire Department shallbe notified in advance of any such parking.

h. Vehicles and equipment using chemicals or petroleum products that are parked in the Groundwater Protection Overlay District shall be kept in good operating condition and regularlyinspected for leaks, deterioration, malfunctions and spills. Any leaks or spills shall be cleaned up promptly, and the CEO, North Yarmouth Fire Department, and Yarmouth Water District notified immediately.

5. **Residential Activities, Home Occupations and Other Wastewater Disposal:** Activities of concern include: production of septic wastes, use of gasoline or fuel oil, automotive or similar shopwork, lawn or garden care with fertilizers and pesticides, use and disposal of chemicals from homeoccupations such as photographic studios, beauty salons, car washing activities, etc. Most homescontain stores of small quantities of several hazardous chemicals (gasoline, fuel oil, bleach, paint thinners, pesticides, drain cleaners, etc.). Even disposal of small quantities of these chemicals through septic systems or on the ground can cause significant groundwater contamination.

   a. Residents and other owners of properties located within the Groundwater Protection Overlay District should be informed of the potential for groundwater contamination from domestic use of various chemicals.

   b. Home occupations shall not negatively impact groundwater quality. No on-site disposal of chemicals from home occupations shall be allowed within the Groundwater Protection OverlayDistrict.

   c. Developers of residential subdivisions and other developments with significant amounts of wastewater shall complete a nitrate loading study. The concentration of nitrate at the well shallbe calculated, using the following conservative estimates: concentrations of nitrate leaching from the septic system: 40 ppm; volume of leachate per day per housing unit: three hundred sixty (360) gallons; natural recharge rates for precipitation through soils: 0.5 gallons per minute per acre. Such mass balance calculations shall include all existing septic systems and the proposed development. In order to be allowed, the applicant must find that nitrate concentrations will notexceed twenty-five percent (25%) of drinking water standard at a Yarmouth Water District well.

d. Provisions shall be made to maintain septic systems in good working order. Septic tanks shallbe pumped out and the systems inspected, and any needed repairs or replacements made, atleast every three (3) to five (5) years.

e. Heating oil tanks and other fuel tanks shall be located inside or on a stable concrete slab aboveground if outside. If located outside, filters and lines shall be protected from breakage. Tanks and lines shall be inspected and tested for leaks regularly.

f. The use of floor drains is strongly discouraged, and may occur only when absolutely necessary. Water entering floor drains shall be prevented from picking up pollutants or treated to ensure that pollutants do not enter the groundwater. Existing floor drains shall be sealed whenever possible, so that pollutants do not enter the groundwater.

g. New and existing structures shall be connected to public sewer whenever possible. Sewer linesand related piping shall be carefully inspected to insure proper installation, and tested for leakage and certified by the Local Plumbing Inspector. Lines shall be properly maintained and tested for leakage periodically. Sewers and drainage systems shall be designed too assure that storm water does not enter sanitary sewers. Malfunctionings, failings, reconstructions, or problems with sewers shall be reported promptly to the CEO and the Yarmouth Water District.

h. Any spills should be reported to the CEO and the Yarmouth Water District immediately.

6. **Fire Protection:** A “Pre-Plan” for fire prevention and fire suppression for all facilities that store, handle or use hazardous materials shall be prepared. These plans should be tailored to the materials stored on site, and designed to limit groundwater contamination in the event of fire.

7. **Mineral Extraction:** Mineral extraction, including sand and gravel extraction may cause unintended changes in the flow of groundwater. Any mineral extraction produces pits, which can be used for illegal dumping. Vehicles used for mineral extraction may cause spills. Rock crushers use water that may wash pollutants into the groundwater.

   a. The following activities shall be prohibited in the Groundwater Protection Overlay District: mining for metallic ores, rock crushers, salting and oiling of roads, and the storage of petroleumproducts, vehicles, chemicals and hazardous materials.

   b. Disused gravel pits shall be reclaimed according to plans submitted to the town and the Yarmouth Water District.

   c. All mineral extraction activities must have emergency spill response plans and equipment on hand such that a spill totaling the full fuel tanks of the largest vehicle used in the pit can be removed outside the Groundwater Protection Overlay District within one day.

8. **Fill:** Only clean non-polluting fill (no non-natural odors, non staining, and not originating at a knownspill site) may be used for filling depressions or raising the ground level. Fill areas shall be well setback from rivers, streams, books, ponds, wetlands and other bodies of water and appropriate erosion and sedimentation control measures shall be implemented.

9. **Wells:** Wells provide a possible conduit for contaminants originating in surface water, or upper aquifers to migrate to groundwater below.

   a. Wellheads shall be designed such that surface water does not enter groundwater through of the borehole around the well casings.

b. Wells that penetrate to lower aquifers shall have the space between borehole and casing grouted where it crosses an aquiclude.

c. Wells that are no longer in service for extraction or monitoring shall be abandoned in a manner appropriate to prevent the entry of contaminants and from mixing of separate subsurface water-bearing zones. This may involve the use of bentonite and/or cement grout where a watertight seal is deemed necessary.

d. High yielding wells (for uses other than domestic purposes) will only be allowed if a safe yield analysis, conducted by a Maine certified geologist, can demonstrate that there is sufficient waterfor both the new well and the public water source.

e. Wells shall be inspected regularly to check for structural integrity, capping, and any needed repairs or maintenance.

10. Animal Husbandry:

a. A Nutrient Management Plan must be provided for all farming activities. Such a plan shall describe how animals will be kept within the area, (the number of animals will in any case not exceed 25 animal units (1 unit =1000 lbs of live animal weight) per ten (10) acres of land), or how manure will be spread (no more than fifty (50) tons of manure to be used per ten (10) acres).

b. Application of manures shall be tailored to the specific needs of the crop, as determined by soil suitability analyses.

c. Manures shall not be applied over very shallow soils (less than one (1) foot) or exposed bedrock.

d. Manure shall not be applied on frozen ground, or immediately before storm events.

e. Animal husbandry operations shall be pursuant to Section 9.2 Groundwater Protection Overlay District: Best Management Practices.

SECTION 9.3 ROYAL RIVER CORRIDOR OVERLAY DISTRICT [AMENDED 6/19/21]

A. **Purpose:** The Royal River Corridor Overlay District includes land areas within five hundred (500) feet on either side of the Royal River, Chandler Brook and the East Branch. The Royal River Corridor Overlay District is designed to provide additional standards to preserve the Royal River Corridor, including the Chandler Brook corridor and the East Branch corridor as greenways in open space uses. The purpose of the RoyalRiver Corridor Overlay District is to preserve open space and conserve natural beauty; protect wildlife habitat and corridors; protect water quality; protect archaeological and historic resources; provide passiverecreational corridors; control building sites and placement of structures and land uses; and anticipate and respond to the impacts of development in the river corridors.

B. **Standards:** In addition to the provisions of the underlying district, all land use activities within the RoyalRiver Corridor Overlay District shall be in accordance with these provisions.

1. **Uses Requiring Site Plan Review:** Uses listed in Section VII. Zoning District Regulations, Table 7-1. Land Uses by District, as requiring Site Plan Review in the Royal River Corridor Overlay Districtshall be designed to preserve open space and the natural vegetation of the corridor consistent withthe town's vision for the Royal River Corridor as described in the Comprehensive Plan and the Open Space Plan. In addition to the submission requirements in Section 3.3. Building/Land Use Permits, the Planning Board shall require that the location of the building envelop be identified on the plan and a written description of the best management practices

that will be used to limit soil erosion and sedimentation for all activities within the corridor that will involve disturbance of the natural vegetation, both during and after construction be submitted. The Planning Board may require that the best management practices be pursuant to Section 9.1.U. Erosion and Sedimentation Control.

2. **Subdivisions**: All subdivisions within the Royal River Corridor Overlay District shall be in accordance with Section 11.3. Clustered Housing Development and Open Space Development, and shall be designed to preserve open space within the Royal River Corridor Overlay District, as follows:

   a. The area between the normal high-water line of the Royal River, Chandler Brook and/or the East Branch and 250 feet from the normal high-water line of these water bodies shall be permanently preserved in open space.

   b. The area between 250 feet from the normal high-water line of the Royal River, Chandler Brookand/or the East Branch and the Corridor boundary(five hundred (500) feet from the normal high-water line ofthe Royal River, Chandler Brook and/or the East Branch) as depicted on the Zoning Map shallbe used to meet the fifty percent (50%) open space requirement.

   c. **Additional Submission:** The applicant shall submit a Royal River Corridor Management Planthat includes consideration for preserving natural beauty, enhancing wildlife habitat and corridors, considers public access to water bodies and inter-connected trails, and shows how the subdivision development will contribute to the town's vision for the Royal River Corridor District as described in the town's Comprehensive Plan.

X. PERFORMANCE AND DESIGN STANDARDS FOR SITE PLAN REVIEW ANDSUBDIVISION REVIEW

SECTION 10.1 APPLICABILITY

These design and performance standards are applicable to those uses requiring Site Plan Review and Subdivision Review. In reviewing a proposed development, the Planning Board shall review the application for conformance to the applicable standards and make findings of fact for each prior to approval of the final plan. The burden of proof of conformance shall be upon the applicant to provide clear and convincing evidence that the final plan meets the standards of this Ordinance.

Note: The term "development" as used in this Section includes land use activities requiring Site Plan Review and development requiring Subdivision Review pursuant to Section VII. Zoning District Regulations Table
7.1. Land Uses by District.

SECTION 10.2 GENERAL LAYOUT OF DEVELOPMENT [AMENDED 6/19/21]

A. **Utilization of the Site:** The plan for the development must reflect the natural capabilities of the site to support the development. Buildings, lots and support facilities must be clustered in those portions of the site that have the most suitable conditions for development. Environmentally sensitive areas, including butnot limited to, wetlands, steep slopes, 100-year floodplains, significant wildlife habitats and corridors, scenic areas, unique natural areas, and significant groundwater aquifers must be maintained and preserved to the maximum extent practical. Natural drainage areas must also be preserved to the maximum extent practical. The development must include appropriate measures for protecting these resources, including but not limited to, modification of the proposed design of the site, timing of construction, and limiting the extent of land disturbance.

B. **Lots: [Amended 4/9/16]**

1. If more than one building is located on a lot, a plan must be submitted to the CEO to show how the lot can be divided by theoretical lot lines to create multiple building lots to conform to the standards of this Ordinance. The theoretical lot lines show compliance with the standards of this Ordinance without causing legal subdivision of land. Theoretical lot lines may not span multiple lots of record.

2. Land within the right-of–way of roads serving more than two (2) lots shall not be included toward calculating minimum lot area.

3. Wherever practical, side lot lines shall be perpendicular to the street.

4. If a lot on one side of a stream, brook or private road fails to meet the minimum requirements for lot size, it may be combined with a lot on the other side of the stream, brook or private road to meetthe minimum lot size.

5. **Subdivisions, only:** The subdivision of tracts into parcels with more than twice the required minimum lot size shall be laid out in such a manner as either to provide for or preclude future division. Deed restrictions and notes on the plan shall either prohibit future divisions of the lots or specify that any future division shall constitute a revision to the plan and shall require approval fromthe Planning Board, subject to the criteria of the subdivision statute, the standards of these regulations and conditions placed on the original approval.

6. **Interconnected Development:** Where possible, developments shall be designed to facilitate future interconnected street, pedestrian (sidewalks and trails), bicycle, and open space networkspursuant to Sections VIII & X.

C. **Blocks:** Within the Village Center District and Village Residential District, where street lengths exceed one thousand (1,000) feet between intersections with other streets, the Board may require a utility/pedestrian easement, at least thirty (30) feet in width, to provide for underground utility crossings and/or a pedestrian pathway of at least five (5) feet in width. Maintenance obligations of the easement(s) shall be included in the written description of the easement.

D. **Utilities:** Utilities serving developments in the Village Center District and Village Residential District shall be installed underground. In other districts, utilities serving lots with a street frontage of one hundred twenty-five (125) feet or less shall be installed underground. The Planning Board may approve overhead utilities when the applicantproposes **affordable housing** and provides evidence that the increased costs of underground utilities willraise the costs of the housing beyond the requirements for affordable housing in this Ordinance.

E. **Monuments Required in All Developments**:

1. Stone monuments shall be set at all street intersections and points of curvature, but no further than750 feet apart along street lines without curves or intersections.

2. Stone monuments or capped iron pipe shall be set at all corners and angle points of the development boundaries, not already marked, where the interior angle of the development boundaries is one hundred thirty-five degrees (135°) or less.

3. Stone monuments shall be a minimum of four inches square at the top and four feet in length, andset in the ground at final grade level. After they are set, drill hole $^1/_2$ inch deep shall locate the pointor points described above.

4. All other development boundary corners and angle points, as well as all lot boundary corners and angle points shall be marked by suitable monumentation, as required by the Maine Board of Registration of Land Surveyors.

SECTION 10.3. BROOK, POND, VERNAL POOL AND WETLAND BUFFERS

A. **Purpose and Applicability:**

1. The purpose of these requirements is to protect water quality, aquatic life, and wildlife habitat in and adjacent to streams, ponds and wetlands town wide, and to protect private and public propertyfrom flooding and poor drainage conditions caused by locating buildings in or close to these areas.These regulations are intended to protect natural resource areas that are not covered in Section Residential Shoreland District and Natural Resource Protection District Performance Standards.[1]
2. These regulations distinguish between high and low value wetlands. High value wetlands generallyhave surface water for a prolonged period during the growing season, or, they are located in closeproximity to other wetlands, ponds and streams. These are the two most important factors in determining how well a wetland functions in terms of providing benefits to the community.

[1] Section VII Section 7-1. Residential Shoreland District and the Natural Resource Protection District Performance Standards are applicable to the following: Royal River, Chandler Brook, the East Branch, Deer Brook Wetland, Knight's Pond, and the Resource Protection portions of Toddy Brook, Deer Brook, Pratt's Brook, and an unnamed tributary to Chandler Brook (as displayed on the Zoning Map), and tributary streams to the aforementioned when located within the Residential Shoreland District and Resource Protection District.

3. In the event that the requirements of this section overlap the requirements of Section 7.1. Residential Shoreland District and Natural Resource Protection District Performance Standards, the more restrictive requirements shall apply.

B. **Protected Resources**:

1. **Stream:** A "river, stream or brook" as defined by the Maine Natural Resource Protection Act

2. **Pond:** A naturally occurring inland body of water, but not including great ponds as defined by the Natural Resource Protection Act.

3. **Vernal Pool:** A naturally occurring, temporary to permanent body of water in shallow depressionsthat fills during the spring and fall and may be dry during the summer. The vernal pool contains noviable populations of predatory fish, and it provides primary breeding habitat for wood frogs, spottedsalamanders, blue-spotted salamanders, and fairy shrimp and provides habitat for other wildlife including several endangered and threatened species. The presence of one or more of these species is usually conclusive evidence of a vernal pool.

4. **High Value Wetlands:** A freshwater wetland, as defined by the Maine Natural Resource ProtectionAct[1], which meets one or more of the following criteria:

   a. Contains a pond or a vernal pool;

   b. Lies within the 100-year floodplain of a stream or a pond;

   c. More than fifty percent (50%) of the dominant species in all strata of the vegetation consist of facultativewetland or obligate wetland plant species, as listed in the National List of Plant Species that Occur in Wetlands, by the U.S. Fish and Wildlife Service, latest edition.

5. **Low Value Wetland:** A wetland, as defined by the Natural Resource Protection Act, which doesnot meet the criteria of a high value wetland.

C. **Standards**:

1. Vegetative buffers shall be located between all disturbed areas of a development and streams, ponds, vernal pools and high value wetlands.

2. Vegetative buffers shall retain existing vegetation or be planted with trees native to the locale, having a height of at least four (4) feet and be capable of growing at least twenty (20) feet in height. For natural buffers, or for planted buffers at twenty (20) years after planting, the canopy of the growth shall have no openings greater than two hundred fifty (250) square feet. Trees shall be added where natural growth does not providefor sufficient canopy.

3. The buffer width shall be related to the slope of the land as presented in the following table.

[1] A fresh water wetland means fresh water swamps, marshes, bogs and similar areas that are: inundated or saturated by surface or groundwater at a frequency and for a duration sufficient to support, and under normal circumstances do support, a prevalence of wetland vegetation typically adapted for life in saturated soils; and not considered part of great pond, coastal wetland, river, stream or brook. (Title 38 M.R.S. Section 480- B).

Vegetative Buffer Requirements	
Average Slope of the Land Between Disturbed Area and Normal High Water Mark (Percent)	**Width* of Strip Between Disturbed Area and Normal High Water Mark (Feet)**
0-10%	50
11-20%	90
21-30%	130
31-40%	170
41-50%	210
51-60%	250
61-70%	290
Over 70%	330
*Measured along the surface of the ground *Source: DEP Site Location Law Rules*	

4. For both natural and planted buffer strips, the ground shall be left in its natural state to the greatestextent practical. The organic and duff layers shall not be removed.

5. Buffer strips shall be maintained in a reasonably natural state.

   a. Clearing of dead and diseased trees may occur. Additional trees, native to the locale, having aheight of at least four (4) feet and capable of growing to at least twenty (20) feet in height will be added whereclearing creates canopy openings larger than two hundred fifty (250) square feet.

   b. The underlying vegetation, and the organic and duff layers shall not be removed.

6. Buildings and other structures must be set back a minimum of fifty (50) feet from all low value wetlands.A buffer strip as described in subsections 4 and 5 above shall be maintained within twenty-five (25) feet of all low value wetlands.

7. Permanent markers shall be installed a minimum of every one hundred (100) feet along the upland boundary of all buffers. The Board may require additional markers if necessary to clearly identify the upland boundary of the buffers.

D. **Plan Submittals:** When buffers are required pursuant to these provisions the following site plansubmittals shall be required for all activities requiring Subdivision Review or Site Plan Review.

1. The site plan shall show identified wetland types, the layout of the buffer and the topography of thesite. The extent of existing and proposed vegetation and the pre- and post- development topography will be shown on the plan.

2. Description of existing vegetation in the proposed buffer area.

3. If a new buffer is proposed, a description of how the buffer will be developed.

4. Description of provisions for maintenance of the buffer area including restrictions on earth movingand vegetative clearing.

5. List of deed restrictions and covenants to be included in deed to all affected properties or lots. A drawing with the buffer location and markers shall be attached to the deed.

6. Plat with buffer location, marker locations, maintenance provisions, and list of deed restrictionsand/or covenants.

E. **Exemptions**:

1. Buffers and setbacks are not required adjacent to the following areas:

   a. Swales and ditches, and impoundments created for drainage purposes;

   b. Artificial impoundments of streams constructed prior to the enactment of this Ordinance;

   c. Low value wetlands, averaging thirty (30) feet or less in width, as determined by measuring the widthof five (5) evenly spaced sections, that function primarily as drainage swales in upland areas.

2. Buffers and setbacks do not apply to the following projects:

   a. Storm water management facilities

   b. Road crossings, bridges, culverts, and the installation of utilities needed to access property onthe other side of wetlands and bodies of water;

   c. Docks, boat ramps, and other structures necessary for direct access to water bodies.

SECTION 10.4 BUILDING STANDARDS [AMENDED 6/19/21]

A. **Purpose**:

1. To provide buildings that reflect the scale and character of buildings within the community.
2. To allow for flexible building expansion to increase floor area
3. To allow for attached or detached accessory buildings to provide additional usable space.
4. To allow additional buildings and structures to be provided on a lot.

B. **Applicability:**

1. This section applies to the construction of all new buildings, building renovations, and building additions in the Village Center District.
2. This section applies to single-family detached dwelling units in a Pocket Neighborhood.
3. This section does not apply to a single-family detached dwelling but may be used as advisory guidelines.

CONTENTS

A. **General Building Standards**
1. Number of Buildings 10.4-2
2. Nonconforming Buildings 10.4-2
3. Building Assembly 10.4-3
4. Roofs 10.4-5
5. Components 10.4-5
6. Height 10.4-6
7. Building Orientation 10.4-7
8. Building Elevation 10.4-7
9. Fenestration 10.4-8
10. Primary Entrances 10.4-9
11. Shopfronts 10.4-9
12. Building Articulation 10.4-10
13. Slopes & Terraces 10.4-10
14. Liner Buildings 10.4-11
15. Mezzanines 10.4-11

B. **Primary Building Types**
1. Informal Building 10.4-13
2. Cottage 10.4-14
3. House 10.4-16
4. Bungalow 10.4-18
5. Duplex 10.4-20
6. Apartment House 10.4-22
7. Apartment Building 10.4-24
8. Townhouse 10.4-26
9. Shophouse 10.4-28
10. Live/Work Flex 10.4-30
11. Shop 10.4-32
12. Inn 10.4-34
13. Fabrication Building 10.4-36
14. Mixed-Use Building 10.4-38
15. Civic Building 10.4-40

C. **Accessory Building Types**
1. Barn 10.4-44
2. Farm Stand 10.4-46
3. Carriage House 10.4-48
4. Fabrication Shop 10.4-50
5. Accessory Shop 10.4-52

D. **Components**
1. Porch 10.4-54
2. Gallery 10.4-54
3. Side Wing 10.4-55
4. Rear Addition 10.4-55
5. Stoop 10.4-56
6. Connector 10.4-56
7. Cross Gable 10.4-57
8. Shed Dormer 10.4-57
9. Dormer Window 10.4-58
10. Bay Window 10.4-58
11. Balcony 10.4-59
12. Extended Shopfront 10.4-59
13. Turret 10.4-60
14. Arcade 10.4-60
15. Porte-Cochere 10.4-61
16. Portico 10.4-61
17. Canopy 10.4-62
18. Deck 10.4-62
19. Tower 10.4-63
20. Roof Deck 10.4-63
21. Cupola 10.4-64

E. **Roof Types**
1. Gable Roof 10.4-66
2. Hipped Roof 10.4-68
3. Mansard Roof 10.4-70
4. Gambrel Roof 10.4-72
5. Shed Roof 10.4-74
6. Flat Roof 10.4-76

F. **Special Definitions**
1. Definitions 10.4-78

1. **Number of Buildings**

PURPOSE - To be able to effectively regulate the number of buildings allowed on a lot.

APPLICABILITY - Applies to all buildings and accessory buildings.

A. **General**

1. Multiple primary buildings may be built on each lot.

2. Multiple accessory buildings may be built on each lot.

3. An accessory building may not permanently occupy a lot without a primary building except:

   a. On lots actively used for agricultural uses, the barn accessory building may occupy a lot without a primary building.

   b. An accessory building may be built on a lot prior to a primary building only if both the primary and accessory buildings have been permitted according to the standards of this Section.

2. **Nonconforming Buildings**

PURPOSE - To allow for the flexible modification, adaption, reuse, and expansion of buildings that existed prior to and were made non-conforming by this Ordinance.

APPLICABILITY - Applies to all buildings, accessory buildings, and additional structures that existed prior to the adoption of this Ordinance, and that do not meet all the standards of this Section.

A. **General**

1. Routine repair and maintenance of nonconforming buildings is permitted.

2. Nonconforming buildings may be altered to eliminate or reduce a nonconformity or to create a conforming building type that meets the standards of this Ordinance.

3. The width and length of the main building mass of a nonconforming building may be expanded within the allowed setbacks of the district and to the extent permitted by the assigned building type.

4. A nonconforming building may be increased in height to the extent permitted by the assigned building type, except when the floor to ceiling heights of the nonconforming building are greater than those allowed for the assigned building type.

5. Nonconforming buildings may be expanded by adding components that meet the standards of this Ordinance, except when the main building mass exceeds either of the maximum width and length dimensions permitted by the assigned building type. In this case, the total square footage of the building may not exceed the sum of the square footage that would be permitted for a main building mass, rear wing, and side wing of the same building type.

6. When nonconforming buildings are expanded with permitted massing components, floor height standards may be waived to allow floor heights to match.

7. When nonconforming buildings are expanded, windows, doors, and roof shape may take the form of the nonconforming building.

8. A nonconforming building may not be moved in whole or part to another location unless the building conforms to the standards of the district to which the building is moved.

9. When the main building mass of a nonconforming building is destroyed and requires total replacement, the building must be rebuilt to meet the standards of this Ordinance.

10. When any portion of a nonconforming building is damaged and does not require a total reconstruction, it may be repaired and rebuilt to its previous condition.

11. Where a nonconforming building, including the main building mass or components, encroach into setbacks, the building may be expanded vertically so long as the additions and modifications otherwise meet the standards of this Ordinance.

3. **Building Assembly**

PURPOSE
To provide a clear and flexible system for enabling the construction of new buildings and the expansion and modification of existing buildings.

To allow for a broad range of building designs.

APPLICABILITY - Applies to all primary buildings and accessory buildings.

A. **General**

1. All primary and accessory buildings must meet the standards for one of the building types provided within this Ordinance.

2. Each primary building and accessory building must be comprised of a main building mass with a rectangular form and a single allowed roof type.

3. The following building types are not required to take a rectangular form but must meet standards for building dimensions, height, and setbacks: inn, civic building, and fabrication building.

4. The outer wall of a main building mass must be located entirely in a single plane. Deviations to the wall plane are allowed only through permitted articulations.

5. For the purpose of measurement, building length and width standards apply only to the main building mass of primary and accessory buildings. Components have unique dimensions and standards.

6. Integral components may be used to cut away space within the boundaries of the roof or main building mass provided the eaves and ridge beam of the roof are not affected.

B. **Attachments**

1. Primary buildings may only attach to other primary buildings (or to their components) the number of times indicated in Section B Primary Building Types.

2. Accessory buildings may only attach to primary buildings or other accessory buildings (or to their components) the number of times indicated in Section C Accessory Building Types.

3. Components may attach to primary and accessory buildings.

4. A building may not encroach on setbacks in order to attach to an adjacent building.

5. Primary buildings may attach to other primary buildings or to the components of other primary buildings on no more than two sides.

6. Primary buildings that are allowed to attach to other primary buildings may do so on side or rear walls only.

7. Where a building is allowed to attach to other buildings (or to its component), only one building or component may attach to each building face.

8. Permitted attachments may occur across theoretical or legal lot lines.

9. Where two primary buildings attach, the division between buildings must be apparent on the building's exterior though seams in materials, downspouts, pilasters, buttresses, or other vertical structural elements that are less than 6 horizontal inches from the surface of a building's facade.

10. A group of attached buildings, including their components, must provide gaps or breaks in the street wall at intervals no greater than one hundred eighty (180) ft (measured from the centerline of the break) along any frontage. These gaps may consist of on-site civic space, a pedestrian or service thoroughfare, an extension of the adjacent sidewalk, or narrow side yards.

11. Breaks must measure at least three (3) ft and no more than twelve(12) ft in width when separating two buildings that do not share internal circulation.

12. Where breaks are required between two attached buildings that share circulation, the hyphen component may be used to bridge the resulting gap between the two buildings provided that through-block access is maintained at ground level through a public lobby, passage, or archway and the hyphen is set back at least ten (10) ft from the frontage.

13. Breaks must measure at least ten (10) ft and no more than twelve (12) ft in width when separating two buildings that share internal circulation.

14. A group of attached buildings, including their components, that share internal circulation are limited in aggregate length to no more than 180 ft along any frontage.

15. When a group of attached buildings that share internal circulation includes a corner building, the corner building is limited in width to seventy (70) ft along the secondary frontage. Any additional gap between buildings may be closed using a side wing or rear addition that has a roof type that is distinct from the main building mass.

D. **Internal Circulation**

1. Buildings must maintain an independent structural system, with the exception of party walls, which are shared.

2. Breaks in a party wall between two attached buildings may only occur in order to share circulation, corridors, stairwells, and elevators.

3. First floor commercial units may share a unit between two or more attached buildings by special permit.

4. Party walls must be structural, load bearing, and extend through the width of both buildings to form a continuous wall.

5. The soffit along the frontage of a building may not encroach on a neighboring building lot.

E. **Number of Units**

1. Buildings have a maximum number of units as regulated in Section B Primary Building Types and Section C Accessory Building Types.

2. If a permitted accessory building cannot be constructed due to site restrictions or other design related concerns, the accessory unit associated with the accessory building may be incorporated into the primary building, provided the total area of the accessory unit does not exceed either thirty percent (30%) the area devoted to the buildings primary unit, or the maximum floor area of the permitted accessory building, whichever is smaller.

4. <u>Roofs</u>

PURPOSE - To provide for buildings that have identifiable roof shapes based on local character.

APPLICABILITY - Roof standards apply to all primary and accessory building types and components, with the exception of the civic building, which may have more unique and complex assemblies.

A. **General**

1. The primary building mass, accessory building, or component may only employ one roof type.

2. Pitched roofs must converge, symmetrically, to a single ridge beam at their highest point.

3. Shed roofs are considered to be symmetrical provided the vertical separation between the base of the eaves and the top of the ridge beam is the same across the entire length of the roof.

4. Asymmetrical roof assemblies are prohibited.

5. The upper slope of mansard and gambrel roof profiles must always be less steep than the lower slope.

6. The highest point of the roof of any component must be lower than or equal to the highest point of the roof of the primary building, unless specifically allowed to be taller.

7. Gable ends must be located on the narrowest building face or component face, except for townhouses, live-work/ flex buildings, and bungalows, which must orient the ridge beam parallel with the frontage.

B. **Nonconforming Roofs**

1. Routine repair and maintenance of nonconforming roofs is permitted.

2. Nonconforming roofs may be altered to eliminate or reduce a nonconformity or to create a conforming roof that meets the standards of this Ordinance.

3. When a nonconforming roof is damaged or destroyed, it may be repaired or rebuilt to its previous condition.

4. Accessory buildings and components added to nonconforming buildings may use a roof that takes the form and pitch of the nonconforming primary building.

5. Components

PURPOSE - To provide a clear and flexible system for enabling the construction of new buildings and the expansion and modification of existing buildings.

APPLICABILITY - Applies to all primary buildings and accessory buildings.

A. **General**

1. At least one component is required per primary building except on the mixed-use building.

B. **Attachments**

1. All components may attach to other components, unless otherwise indicated.

2. All components are allowed to stack on top of one another, unless otherwise indicated.

3. Multiple components of the same type may be used more than once, unless otherwise indicated.

4. Multiple components of the same type may not attach to each other, unless specifically allowed, and must be separated horizontally by a distance of no less than one (1) ft.

5. Two components may not occupy the same space (overlap), unless specifically allowed in Section D Components.

6. Any enclosed component that is permitted to extend flush with a side or rear lot line is permitted to attach to a neighboring structure also built flush to the same lot line.

C. **Encroachments**

1. Components may encroach their entire width and/or depth into all setbacks, unless specifically disallowed in Section D Components.

2. Components may be allowed to encroach into the public right-of-way with authorization from the Permitting Authority.

D. **Nonconforming Components**

1. Routine repair and maintenance of nonconforming components is permitted.

2. Nonconforming components may be altered to eliminate or reduce a nonconformity or to create a conforming component that meets the standards of this Ordinance.

3. The dimensions of a nonconforming component may be expanded within the allowed setbacks of the district and to the extent permitted by the assigned component type.

4. When a nonconforming component is destroyed and requires total replacement, the component must be rebuilt to meet with the standards of this Ordinance.

5. When any portion of a nonconforming component is damaged and does not require a total reconstruction, it may be repaired and rebuilt to its previous condition.

E. **Fire Escapes**

1. Fire escapes may be added to existing buildings when no other means of providing egress is possible or practical.

2. Exterior fire escapes may encroach upon side and rear setbacks only.

3. Sizing and location of fire escapes must meet all local and state fire codes.

6. Height

PURPOSE - To create a predictable and clear approach to measuring and regulating height of buildings.

APPLICABILITY - Applies to all new buildings or modifications to existing buildings that increase the overall height of the structure.

A. **Story Height**

1. Building height in this Ordinance is measured in stories.

2. Story height is measured from the surface of any floor to the surface of the floor above it or, if there is no floor above, from the surface of the floor to the top of the wall plate.

3. For buildings with pitched roofs, habitable space is allowed within the pitch and is not considered a story.

4. A building that has more than one floor contained within the structure of a pitched roof must count all but the top floor as a story.

5. A habitable floor within a pitched roof must be counted as a story if the roof rafters intersect the wall plate or top of the exterior wall frame at a height more than two (2) feet above the finished floor of the space.

6. Basements are counted as a story when five (5) feet or more of an exterior wall located within the frontage zone is exposed above the average ground level.

7. In the event that floor heights vary in different parts of the same building, such that multiple stories in one area equate in height to one story in another, the shorter floor-to-floor height should be used to determine number of stories, provided that none of the floors are mezzanines.

B. **Height Exceptions**

1. Maximum height standards do not apply to mechanical equipment; vents or exhausts; solar panels or skylights; flagpoles; chimneys; parapets; or other non-habitable architectural features.

2. The maximum heights of roof decks, towers, turrets, and cupolas are regulated in Section D Components.

3. Maximum height standards for Amateur (HAM) Radio Equipment, and wireless telecommunications facilities are regulated by other Sections within this Ordinance.

7. **Building Orientation**

PURPOSE

- To ensure that buildings address the street in a way that reinforces or creates the character desired in a neighborhood.
- To enable people to access the fronts of buildings.
- To provide consistent placement of buildings within a neighborhood.

APPLICABILITY - Applies to all new primary buildings, accessory buildings, and components.

A. **General**

1. All primary buildings must front on a primary thoroughfare, with the exception of cottages, bungalows and townhouses, which may front on alleys or civic space.

2. The facade of all primary buildings and accessory buildings, and massing components must have the same orientation.

3. Buildings must be oriented parallel to the primary frontage line, with the following exceptions:

a. In the case where a thoroughfare bends, a building may take the orientation of adjacent buildings or orient toward the corner, at an angle determined by drawing an imaginary line between the endpoints of the two side lot lines along the frontage.

b. Buildings that are part of a Pocket Neighborhood must be oriented parallel to the civic space they face.

c. Building orientation may rotate by twenty two and a half degrees (22.5°) by waiver, based on demonstrating that natural landscape features preclude meeting building orientation standards and that those features were not man-made, modified, or adjusted.

8. **Building Elevation**

PURPOSE

- To ensure that buildings with first floor residential uses are raised above the level of the ground as a way to protect privacy where buildings are located close to the street.
- To ensure that buildings with first floor commercial spaces are located at grade to the extent possible to provide accessible shopfronts.

APPLICABILITY - Applies to all new primary buildings and accessory buildings with residential first floor units.

A. **General**

1. Buildings must be elevated along their primary frontage to meet first floor elevation requirements of each primary and accessory building type.
2. Buildings that are located within ten (10) ft of a frontage line must have the first floor at the same grade or higher than the abutting sidewalk.
3. Primary buildings that contain dwelling units on a first floor frontage must be elevated above grade a minimum of two (2) ft along the frontage, except for the following, which may be built at grade:
    a. Live/work flex buildings.
    b. Accessory buildings.
4. First floor elevation is measured from the average ground level at the front of the building to the top of the finished floor of the first story of a building.

9. **Fenestration**

PURPOSE

- To ensure that buildings relate to the street by providing a rhythm of door and window openings.
- To minimize blank walls along thoroughfares to keep eyes on the street.

APPLICABILITY - Applies to all new primary buildings, accessory buildings, and components, not including civic buildings.

A. **General**

1. Fenestration requirements apply to all building facades, except where installation of windows along side or rear property lines is infeasible due to separation requirements mandated by the fire code.
2. The required fenestration percentages apply to the total area of each story of each building facade as measured from the surface of the floor of that story, to the surface of the next floor above; or, if there is no floor above, to either the top of the wall plate, or the base of the buildings eaves, whichever is shorter.

3. Windows and doors must have clear, transparent glass that has a minimum Visible Light Transmission of fifty percent (50%) as indicated by the glass manufacturer.

4. All windows and doors on a building face must be square or vertical in proportion and must have center or edge alignment that is vertical and horizontal, except as follows:

    a. Stairwell windows may be circular, or take the shape of any regular polygon, other than a triangle, taking the orientation of the roof pitch.

    b. Shopfront windows are exempt.

5. Lifting, swinging, or sliding carriage house doors are not permitted within the frontage zone, except for:

    a. On commercial building facades, where doors must be comprised of fifty percent (50%) transparent glass, with multiple vertically proportioned windows or window lights combined to create horizontal compositions.

    b. On accessory buildings.

    c. On civic buildings.

6. Residential sliding doors and windows are prohibited along frontages.

7. Window and door openings may not vertically span more than one story, including floor structures or mechanical systems.

8. Entrances to basements may not be located within the frontage zone.

9. To the extent possible, window and door patterns and window configurations should be used to break the direct line of sight between neighboring properties to minimize privacy impacts.

B. **Nonconforming Fenestration**

1. Routine repair, maintenance, and replacement of nonconforming windows and doors is permitted.

2. Nonconforming windows and doors may be altered to eliminate or reduce a nonconformity or to create conforming windows and doors that meet the standards of this Ordinance.

3. Accessory buildings and components added to nonconforming buildings may use window and door patterns that take the form and rhythm of the nonconforming primary building.

10. <u>Primary Entrances</u>

PURPOSE

- To ensure that buildings are accessible from thoroughfares as a way to encourage pedestrian activity.

- To prevent extended blank walls that can cause a street to feel uncomfortable for pedestrians.

APPLICABILITY

- All new primary buildings and accessory buildings.
- Modifications to existing buildings that include a change in use to a commercial use.

A. **General**

1. At least one primary entrance must be located along the primary frontage of a primary building's main building mass.
2. Cottages, houses, apartment houses, and duplexes may have their primary entrance on the side of a primary building's main building mass, provided the side door is located within the frontage zone.
3. Primary entrances must provide both ingress and egress and be operable and permanently clear at all times.
4. On buildings that contain commercial uses, entrance doors must be provided at intervals of no greater than every thirty (30) linear feet along first floor facades.
5. Primary entrance spacing requirements must be met for each building individually, in that doors on adjacent buildings may not be used to meet the spacing requirement.
6. Primary entrance spacing is measured as the distance between the center line of doors along a facade.

11. **<u>Shopfronts</u>**

PURPOSE - To ensure that areas intended for commercial activity have a shopfront treatment that supports business vitality.

APPLICABILITY - The first floor facade of new primary and accessory buildings including shophouses, mixed-use buildings, shops, accessory shops, and extended shopfronts.

A. **General**

1. Shopfronts must provide doors and windows with a minimum of seventy percent (70%) glazing.
2. Shopfronts may include carriage house doors that meet the glazing requirements.
3. Buildings on corner lots with shopfronts must extend shopfront fenestration a minimum of twelve (12) feet along the secondary frontage.
4. ~~E~~ntrance doors into publicly-accessible commercial units must be provided at intervals of no greater than every twenty-five (25) linear feet along first floor facades.

5. Glazing percentage requirements are based on the surface area of the shopfront. Shopfront surface area is the first floor height multiplied by the total width of the first floor of a building, measured at the frontage.

6. The area of a commercial unit is determined by the first floor height multiplied by horizontal distance between the interior walls of the unit, measured at the frontage.

7. Where a shopfront does not extend across a building's entire facade, the area of the shopfront must be determined by the first floor height multiplied by the total width of the commercial unit.

B. **Nonconforming Shopfronts**

1. Routine repair and maintenance of nonconforming shopfronts is permitted.

2. Nonconforming shopfronts may only expand along a frontage if primary entrance, door and window, and building type standards are met.

12. Building Articulation

PURPOSE

- To enable buildings that contribute to the overall character of a street.
- To minimize exaggerated building articulations that can interrupt pedestrian movement and result in a disorienting built environment.

APPLICABILITY - Applies to new buildings.

A. **General**

1. Architectural features and small articulations less than six (6) horizontal inches from the surface of a building's facade are permitted.

2. Forecourts are permitted on mixed-use buildings, apartment buildings, fabrication buildings, and civic buildings, provided they meet the following standards:

a. Only one building facade may have a forecourt.

b. Forecourts must provide access to the first floor of a building with the same frequency of windows and doors as the facade it is associated with.

c. The width of a forecourt must be no greater than 1/3 of the building face to which it is associated.

d. The maximum depth of a forecourt must maintain a ratio of 1:1 with the height of the associated building face, measured from the surface of the forecourt to the base of the eaves or top of the parapet.

e. The average elevation of the floor of a forecourt must not exceed one (1) ft above the abutting sidewalk.

f. Courtyards located away from the frontage are allowed for mixed-use buildings, apartment buildings, fabrication buildings, and civic buildings, but their dimensions, shape, and size are not regulated by this Ordinance.

g. Arcades, may extend across the gap created by a forecourt to create a peristyle, provided they are not enclosed by glass, railings, or other physical obstructions.

3. Corner buildings with first floor shopfronts may have a chamfered corner, provided the length of the resulting chamfer face is less than 12 feet and that both edges of the chamfer are equidistant from the corner.

a. Chamfered corners must provide an entrance. This entrance may not be counted toward the primary entrance spacing requirement.

b. Mixed use buildings may extend the chamfer to upper stories as desired. All other building types must limit the chamfer to the first floor only.

13. **Slopes & Terraces**

PURPOSE

- To ensure that buildings located in mixed-use areas meet the sidewalk.
- To allow terraces as a way to provide pedestrian circulation adjacent to shopfronts on streets with steep slopes.

APPLICABILITY - Applies to new buildings or existing buildings that want to construct a terrace.

A. **General**

1. Buildings with a zero (0) ft front setback must provide entrances at grade to the abutting sidewalk.

2. Shopfronts must step down entrances to meet the grade of the adjacent sidewalk along the frontage.

3. If a building with a zero (0) ft setback is located on a sloped frontage, the first floor of each commercial unit must match the average elevation of the abutting sidewalk along the frontage of each commercial unit.

4. When the grade of a thoroughfare at a primary or secondary frontage has a slope of ten percent (10%) or greater, the adjacent buildings may provide a level terrace in their front setback.

5. The following standards apply to buildings that are set back less than twelve (12) ft from the street:

a. The terrace must be paved to match the adjacent sidewalk.

b. A railing or low wall must be provided wherever the terrace is elevated more than one (1) ft above grade.

c. Stairs may be provided between abutting terraces to promote pedestrian circulation along shopfronts.

d. When applied, terraces must extend along the entire frontage of the building.

6. The following standards apply to all buildings with a setback greater than twelve (12) ft:

a. The terrace must be surfaced with grass or other vegetation with the exception of permitted patios, or driveways, sidewalks, or walkways that cross the terrace.

b. The lot may be terraced for all, or a portion, of its frontage.

c. The terrace may provide steps to the adjacent sidewalk anywhere along the frontage.

14. **Liner Buildings**

PURPOSE - Liner buildings are a tool to help create or maintain an active and safe street.

APPLICABILITY - Liner building standards apply to any building, use, or lot where a liner building is used to provide parking lot screening.

A. **General**

1. Buildings that may be used as liner buildings include, the mixed use building, townhouse, and live/work flex.

2. Liner buildings must be placed between the building, lot, or use being lined, and the abutting thoroughfare according to the following standards:

a. The total length of liner buildings along a facade being lined should be at least fifty percent (50%) the length of that facade.

b. Gaps in the liner may not exceed twenty (20) ft in continuous length.

c. Liner buildings are only required along the ground floor frontage of the building, lot, or use being lined, but may extend taller.

3. Liner buildings may occupy the same lot as the building, lot, or use being lined, and may share internal circulation, structural system, and individual units between them in the manner of a single building.

15. **Mezzanines**

PURPOSE - To allow partial floors.

APPLICABILITY - Applies to construction of mezzanines in new buildings or existing buildings.

A. **General**

1. Publicly accessible mezzanines may be provided within a building story with the following standards:

a. A building story must be at least eighteen (18) ft in height to accommodate a public mezzanine.

b. A public mezzanine must have a ceiling height of at least eight (8) ft measured from the finished floor of the mezzanine to the surface of the finished ceiling or underside of the structural members of an unfinished ceiling.

c. The area of a public mezzanine may be no greater than fifty percent (50%) the area of the main floor beneath it.

2. Utility or mechanical mezzanines, intended only for access by repair personnel, may be provided within a full building story with the following standards:

   a. A building story must be at least fifteen (15) ft in height to accommodate a mechanical mezzanine.

   b. Mechanical mezzanines may be designed as a crawlspace, and have a minimum ceiling height of four (4) ft.

   c. Mechanical mezzanines may be no greater than seventy-five percent (75%) the area of the main floor beneath them.

3. From the exterior of the building, mezzanines should appear like part of the story they are associated with. A mezzanine may not appear like a complete building story from the outside.

TABLE B - BUILDING TYPE SUMMARY

1. INFORMAL BUILDING

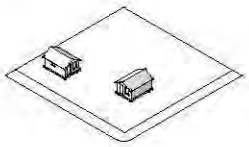

2. COTTAGE



3. HOUSE



4. BUNGALOW



5. DUPLEX

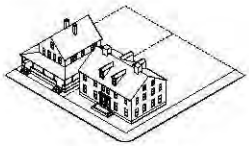

6. APARTMENT HOUSE



7. APARTMENT BUILDING



8. TOWNHOUSE

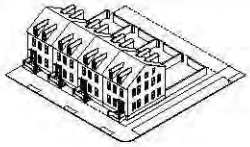

9. SHOPHOUSE



10. LIVE/WORK FLEX

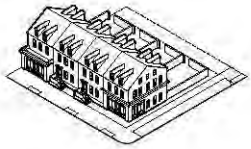

11. SHOP

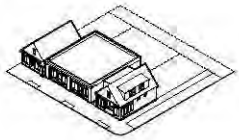

12. INN

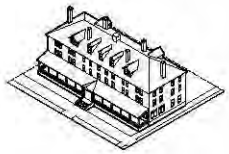

13. FABRICATION BUILDING

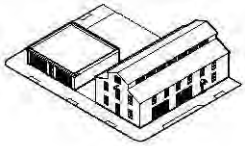

14. MIXED-USE BUILDING

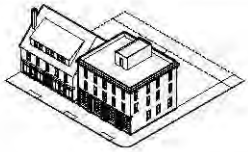

15. CIVIC BUILDING



1. INFORMAL BUILDING

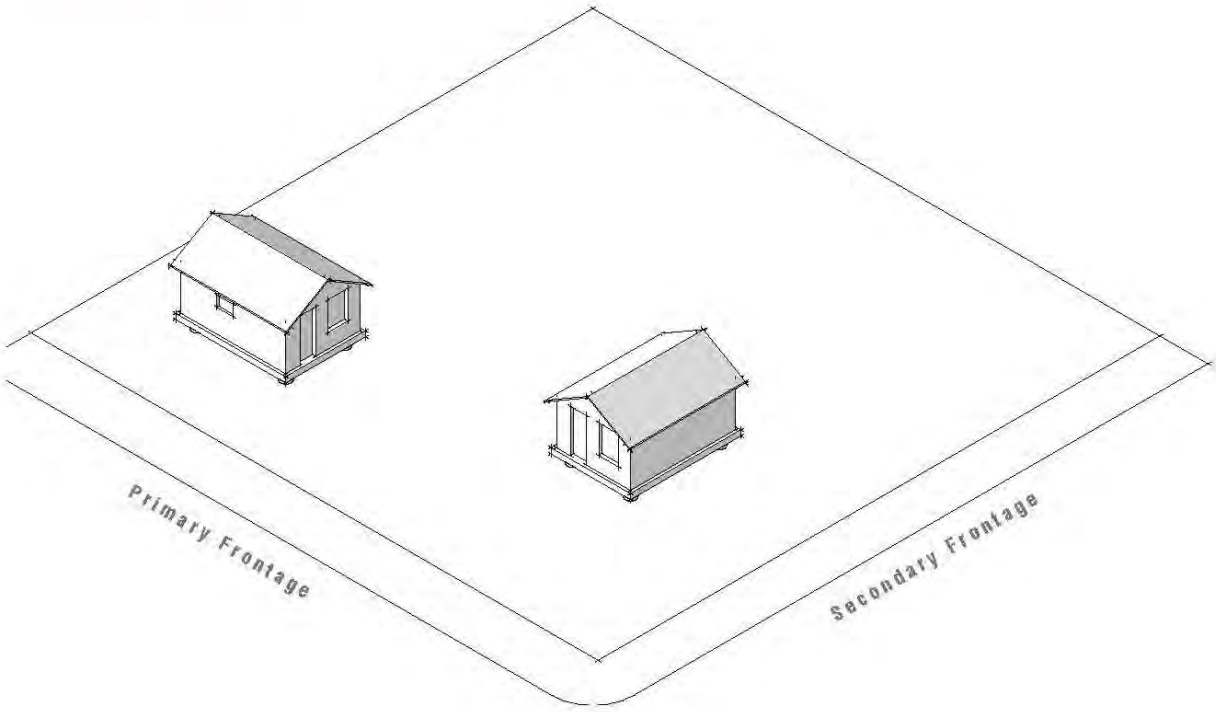

a. DESCRIPTION

A light imprint, low impact, temporary, and informal building that enables creative use of property, including shacks, yurts, cabins, lean-tos, a-frames.

b. BUILDING FORM

Building Floor Plate	500 sf max
Total Stories	1 max
First Floor Height	12 ft max
First Floor Elevation	n/a
Roof	see Section E Roof Types
Attachments	none

c. ALLOWABLE UNITS

1 unit max

d. WINDOWS & DOORS

First Floor Fenestration	n/a
Upper Floor Fenestration	n/a

e. STANDARDS

1. Informal buildings may function as a primary or accessory building.
2. The total aggregate area of informal buildings on a single lot (or series of adjacent lots in common ownership) may not exceed 5,000 sf.
3. Informal buildings do not need to front onto a thoroughfare.
4. For a structure to be considered an informal building it must meet any three of the following four standards.
    a. Building is less than 500 SF total.
    b. Building has no permanent physical connection to off-site water, electrical, or sewage utilities.
    c. Building has no insulation.
    d. Building has no permanent foundation. Informal foundations may consist of:
        i. Jacks, blocks, or piers that rest on the surface of the bare ground.
        ii. A chassis with independent suspension and axles capable of free rotation.
        iii. Any other type of foundation that may be de-constructed and removed with minimal site disturbance, and with little need for heavy machinery or invasive techniques.

2. COTTAGE

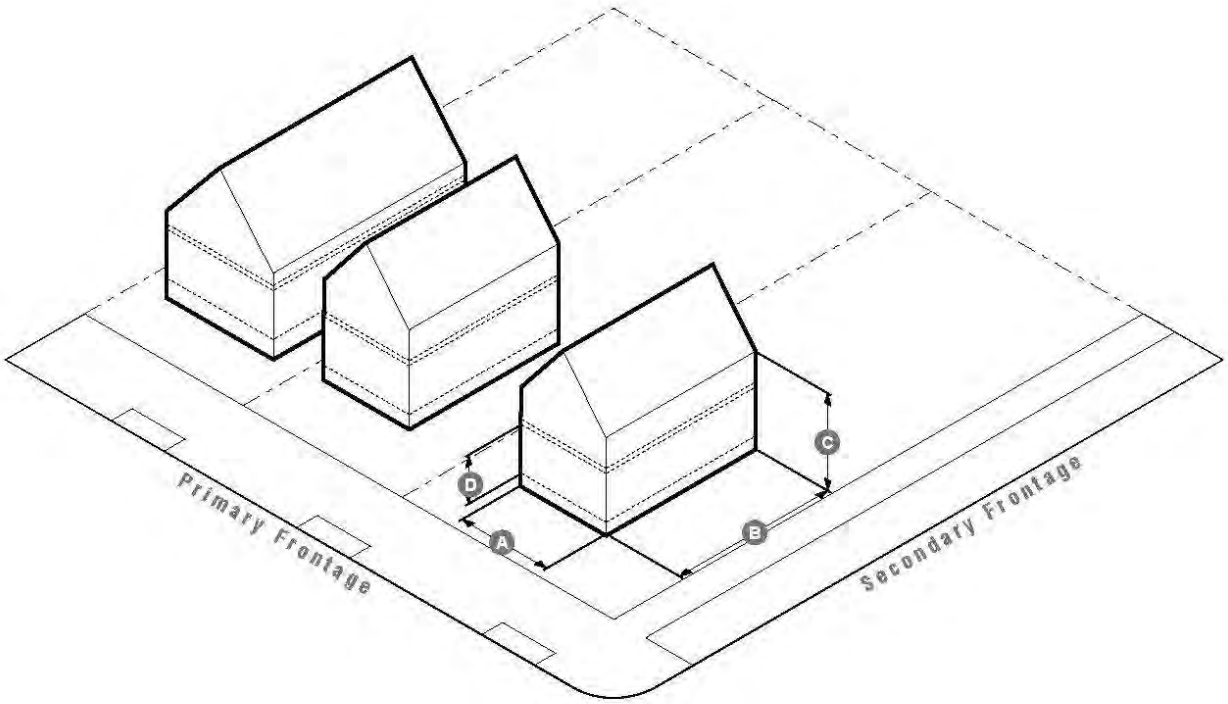

a. DESCRIPTION

A small detached building with one unit.

b. BUILDING FORM

Building Width	14 ft min, 20 ft max	A
Building Length	40 ft max	B
Total Stories	1 story max	C
First Floor Height	9 ft min, 10 ft max	D
Upper Floor Height	n/a	E
First Floor Elevation	2 ft min	
Components	see Section D Components	
Roofs	see Section E Roof Types	
Attachments	none	

c. ALLOWABLE UNITS

1 unit max

d. FENESTRATION

First Floor Fenestration	20% min
Upper Floor Fenestration	20% min

e. STANDARDS

1. A Cottage may possess a chassis with independent suspension and axles capable of free rotation, provided:
   a. The Cottage has a permanent connection to water, sanitary, and power utilities.
   b. The chassis is screened in such a way as to be indistinguishable from a traditional foundation.
   c. The Cottage may not encroach on setbacks.

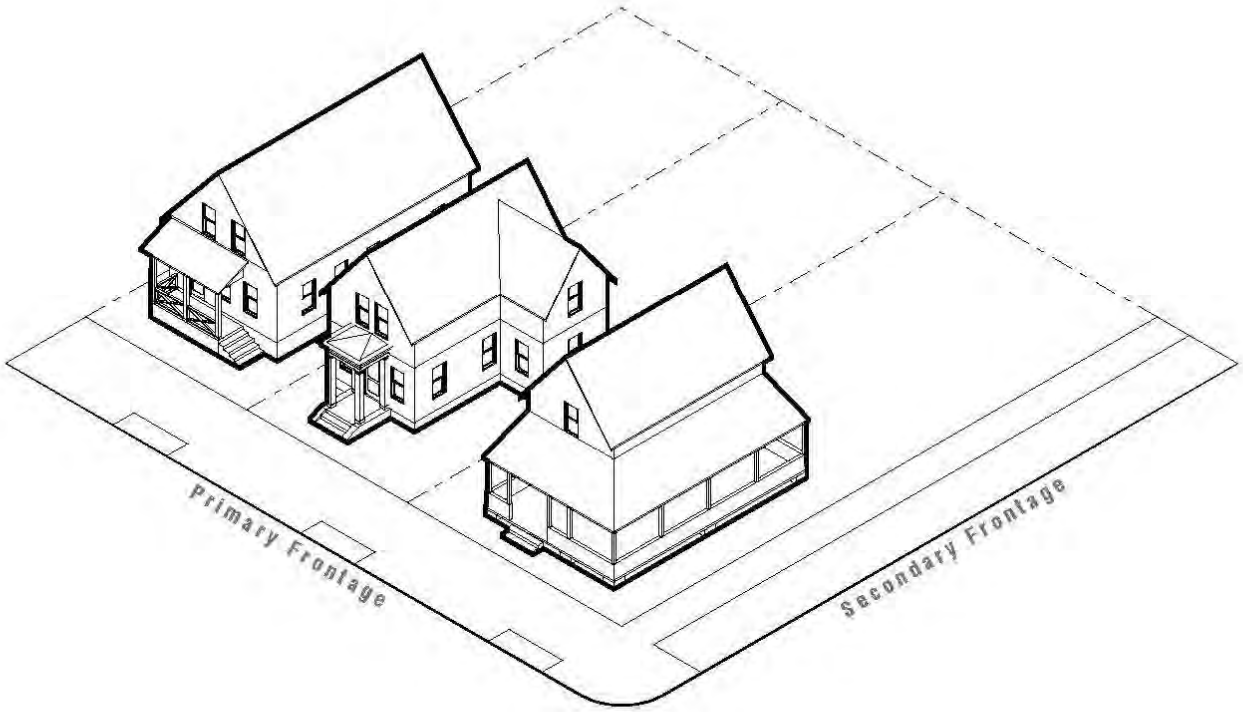

f. MASSING COMPONENTS	
Rear Addition	●
Side Wing	●

g. ARCHITECTURAL COMPONENTS	
Porch	●
Gallery	●
Stoop	●
Cross Gable	●
Shed Dormer	●
Dormer Window	●
Bay Window	●
Balcony	●
Portico	●
Canopy	●
Deck	●
Roof Deck	●

h. ROOFS	
Gable Roof	●
Hipped Roof	●
Mansard Roof	●
Gambrel Roof	●

● Permitted

3. HOUSE

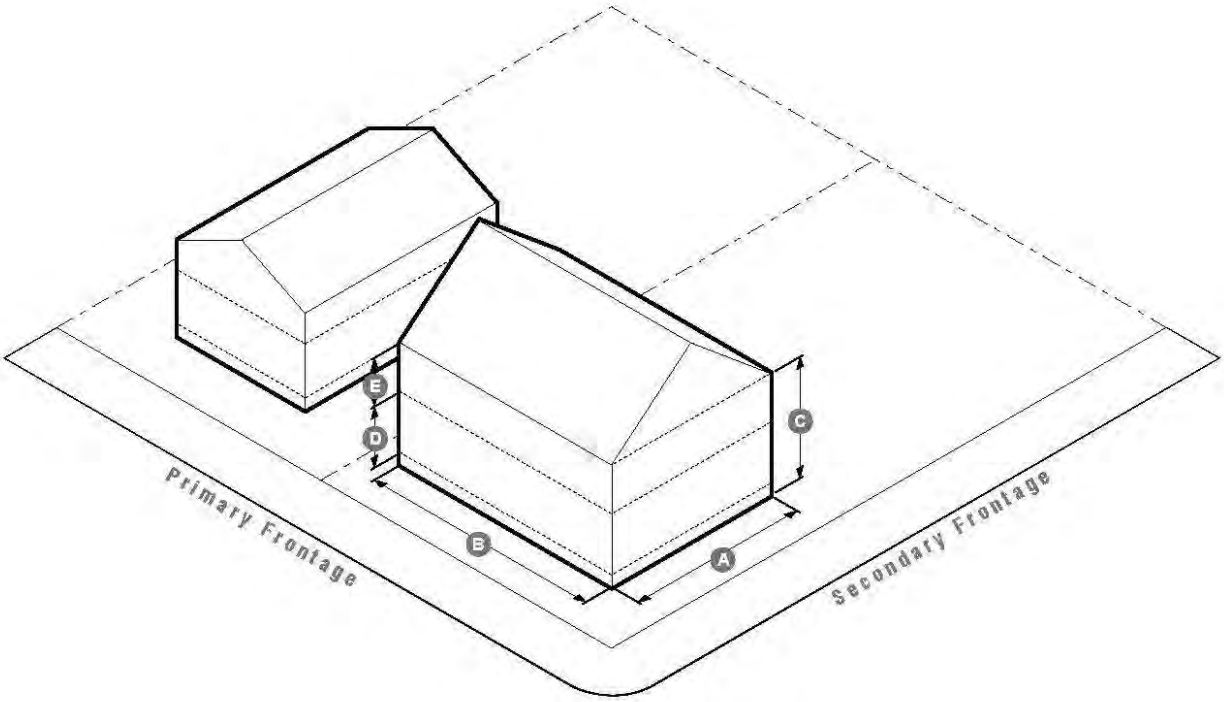

a. DESCRIPTION

A detached building with one unit.

b. BUILDING FORM

Building Width	21 ft min, 36 ft max	A
Building Length	48 ft max	B
Total Stories	2 stories max	C
First Floor Height	9 ft min, 12 ft max	D
Upper Floor Height	9 ft min, 10 ft max	E
First Floor Elevation	2 ft min	
Components	see Section D Components	
Roofs	see Section E Roof Types	
Attachments	none	

c. ALLOWABLE UNITS

1 unit max

d. FENESTRATION

First Floor Fenestration	20% min
Upper Floor Fenestration	20% min

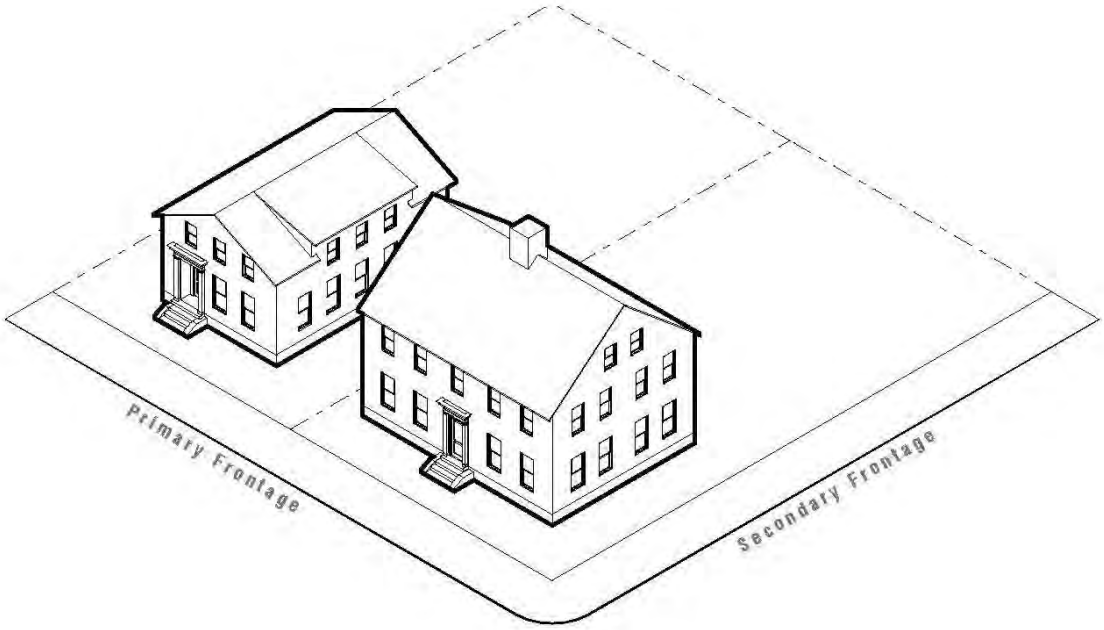

f. MASSING COMPONENTS	
Rear Addition	●
Side Wing	●
Connector	●
Porte-Cochere	●
Tower	●

g. ARCHITECTURAL COMPONENTS	
Porch	●
Gallery	●
Stoop	●
Cross Gable	●
Shed Dormer	●
Dormer Window	●
Bay Window	●
Balcony	●
Turret	●
Portico	●
Canopy	●
Deck	●
Roof Deck	●
Cupola	●

h. ROOFS	
Gable Roof	●
Hipped Roof	●
Mansard Roof	●
Gambrel Roof	●

● Permitted

4. BUNGALOW

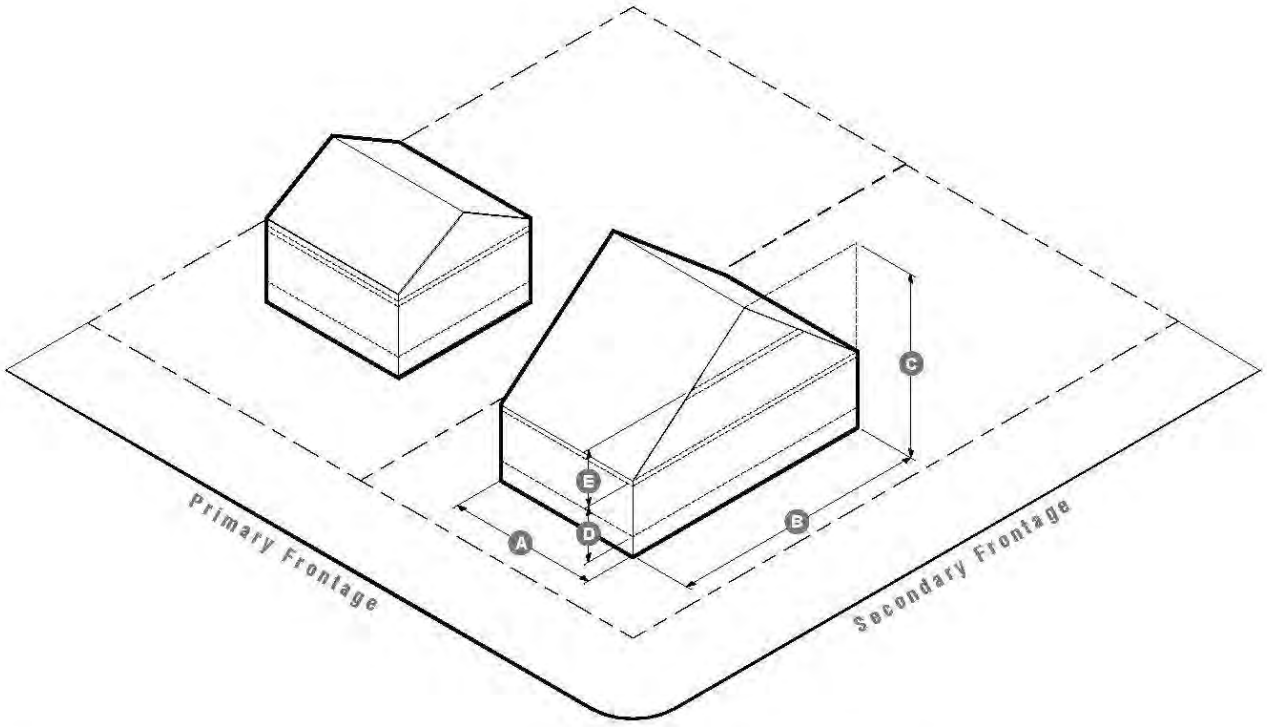

a. DESCRIPTION

A detached building with one unit and a front porch

b. BUILDING FORM

Building Width	36 ft max	A
Building Length	50 ft max	B
Total Stories	2 stories max (2)	C
First Floor Height	9 ft min, 12 ft max	D
Upper Floor Height	9 ft min, 10 ft max	E
First Floor Elevation	2 ft min	
Components	see Section D Components	
Roofs	see Section E Roof Types	
Attachments	none	

c. ALLOWABLE UNITS

1 unit max

d. WINDOWS & DOORS

First Floor Fenestration	20% min
Upper Floor Fenestration	20% min

e. STANDARDS

1. The gable end of a bungalow must be oriented away from the primary frontage.
2. Upper stories must be contained within the roof structure.

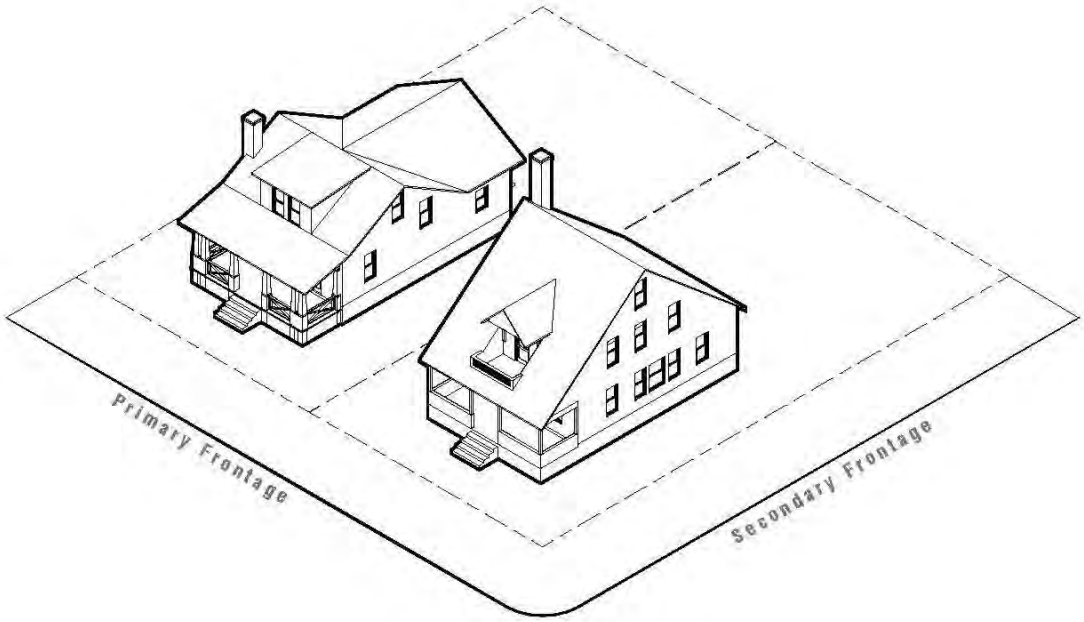

f. MASSING COMPONENTS	
Rear Addition	●
Side Wing	●
Connector	●
Porte-Cochere	●

g. ARCHITECTURAL COMPONENTS	
Porch	●
Gallery	●
Stoop	●
Cross Gable	●
Shed Dormer	●
Dormer Window	●
Bay Window	●
Balcony	●
Portico	●
Canopy	●
Deck	●
Roof Deck	●
Cupola	●

h. ROOFS	
Gable Roof	●
Gambrel Roof	●

● Permitted

5. DUPLEX

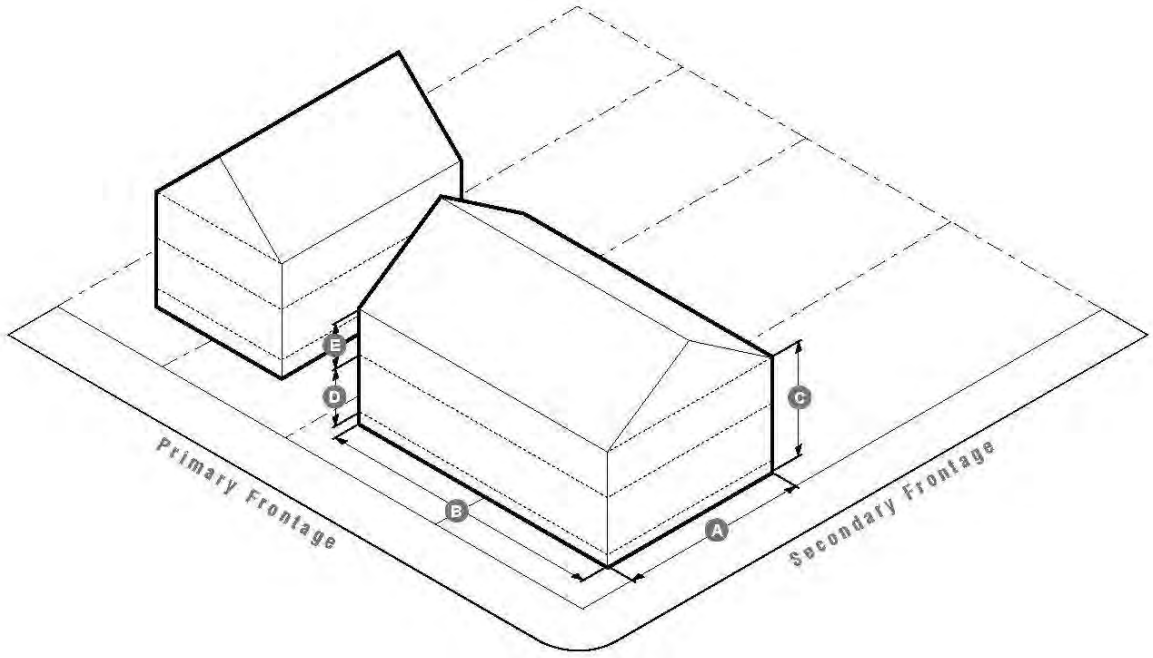

a. DESCRIPTION

A moderately scaled building type comprised of 2 units arranged side by side, where the building spans two lots, with one unit on each lot.

b. BUILDING FORM

Building Width	36 ft max	A
Building Length	48 ft max	B
Total Stories	3 max	C
First Floor Height	9 ft min, 12 ft max	D
Upper Floor Height	9 ft min, 12 ft max	E
First Floor Elevation	2 ft min	
Components	see Section D Components	
Roofs	see Section E Roof Types	
Attachments	none (3)	

c. ALLOWABLE UNITS

2 units max

d. FENESTRATION

First Floor Fenestration	20% min
Upper Floor Fenestration	20% min

e. STANDARDS

1. A porch or gallery may be built on the third floor of a primary frontage provided that there is only one porch or galley below it on either the first or second floor.
2. A duplex may not attach to adjacent buildings.
3. The duplex is a single building that extends across a lot line. The internal shared wall does not count as an attachment.
4. A duplex may sit on a single lot provided the duplex is placed using theoretical lot lines showing how the lot can be divided in future, with one unit on each lot.

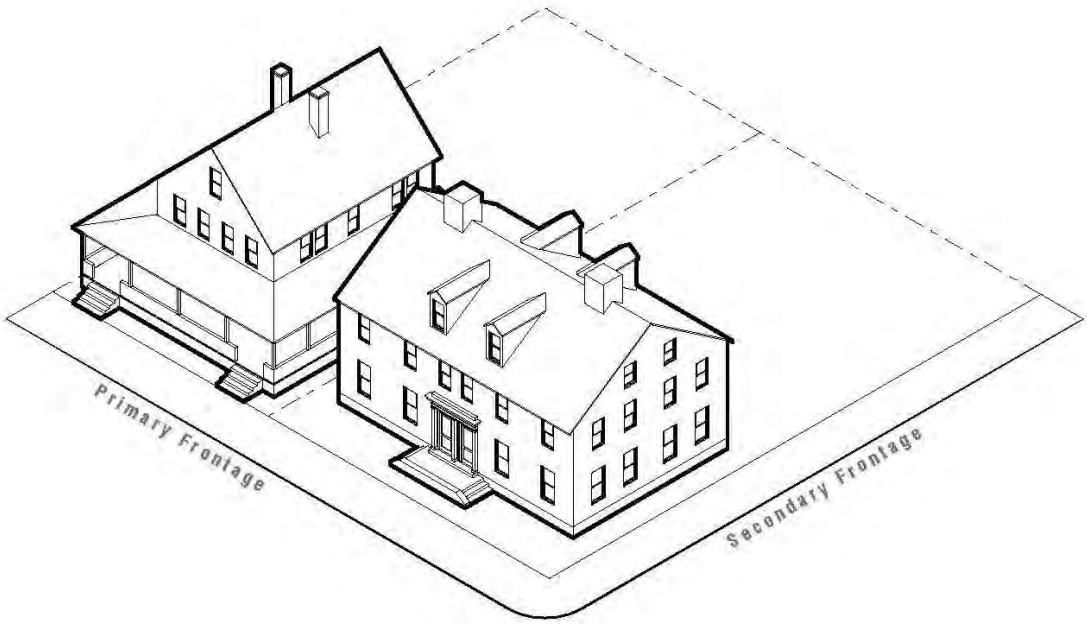

f. MASSING COMPONENTS	
Rear Addition	●
Side Wing	●
Connector	●
Porte-Cochere	●
Tower	●

g. ARCHITECTURAL COMPONENTS	
Porch	●
Gallery	●
Stoop	●
Cross Gable	●
Shed Dormer	●
Dormer Window	●
Bay Window	●
Balcony	●
Turret	●
Portico	●
Canopy	●
Deck	●
Roof Deck	●
Cupola	●

h. ROOFS	
Gable Roof	●
Hipped Roof	●
Mansard Roof	●
Gambrel Roof	●

● Permitted

6. APARTMENT HOUSE

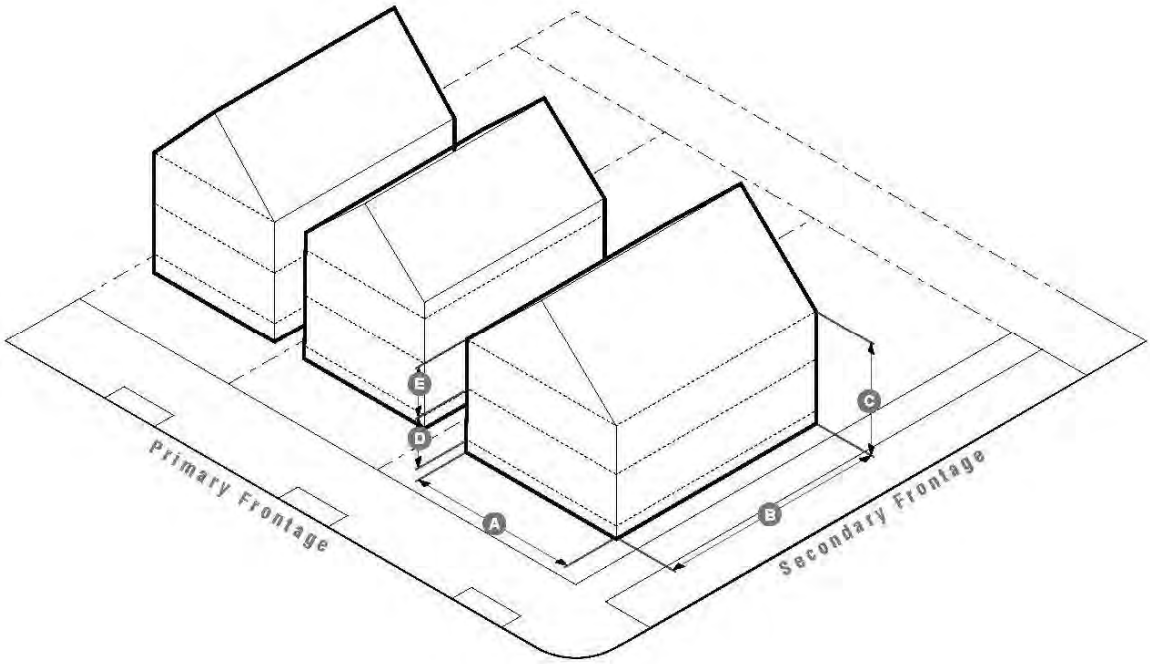

a. DESCRIPTION

A moderately scaled building type comprised of up to 5 units arranged side by side and/or stacked one above the other, yet occupying a single lot.

b. BUILDING FORM

Building Width	36 ft max	A
Building Length	75 ft max	B
Total Stories	3 max	C
First Floor Height	9 ft min, 12 ft max	D
Upper Floor Height	9 ft min, 12 ft max	E
First Floor Elevation	2 ft min	
Components	see Section D Components	
Roofs	see Section E Roof Types	
Attachments	none	

c. ALLOWABLE UNITS

5 units max

d. FENESTRATION

First Floor Fenestration	20% min
Upper Floor Windows & Doors	20% min

e. STANDARDS

1. A porch or gallery may be built on the third floor of a primary frontage provided that there is only one porch or galley below it on either the first or second floor.

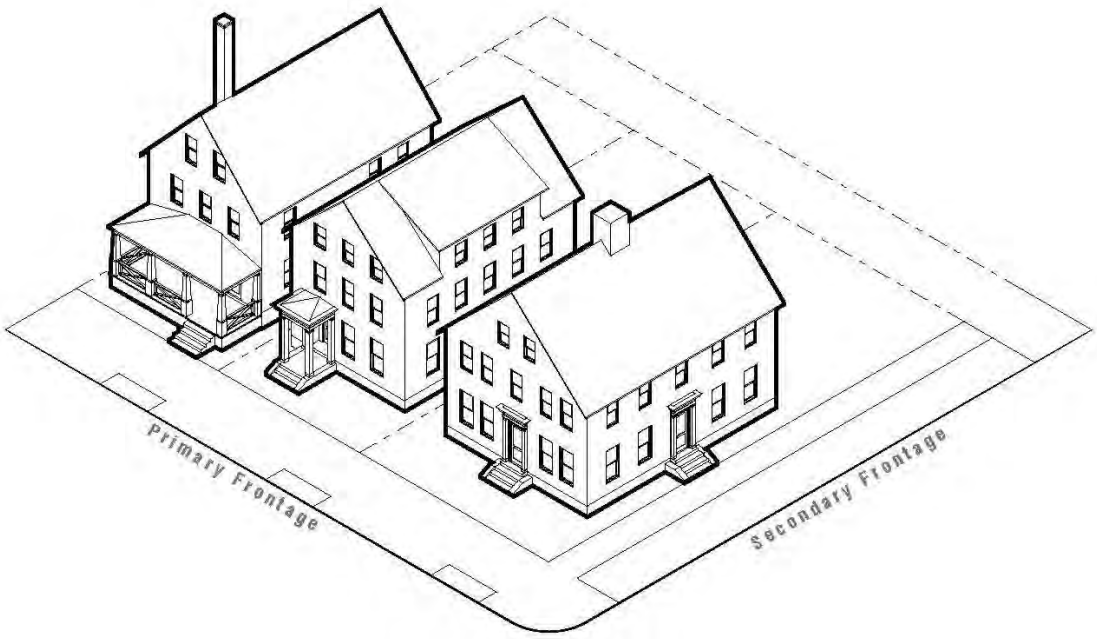

f. MASSING COMPONENTS	
Rear Addition	●
Side Wing	●
Connector	●
Porte-Cochere	●
Tower	●

g. ARCHITECTURAL COMPONENTS	
Porch	●
Gallery	●
Stoop	●
Cross Gable	●
Shed Dormer	●
Dormer Window	●
Bay Window	●
Balcony	●
Turret	●
Portico	●
Canopy	●
Deck	●
Roof Deck	●
Cupola	●

h. ROOFS	
Gable Roof	●
Hipped Roof	●
Mansard Roof	●
Gambrel Roof	●

● Permitted

7. APARTMENT BUILDING

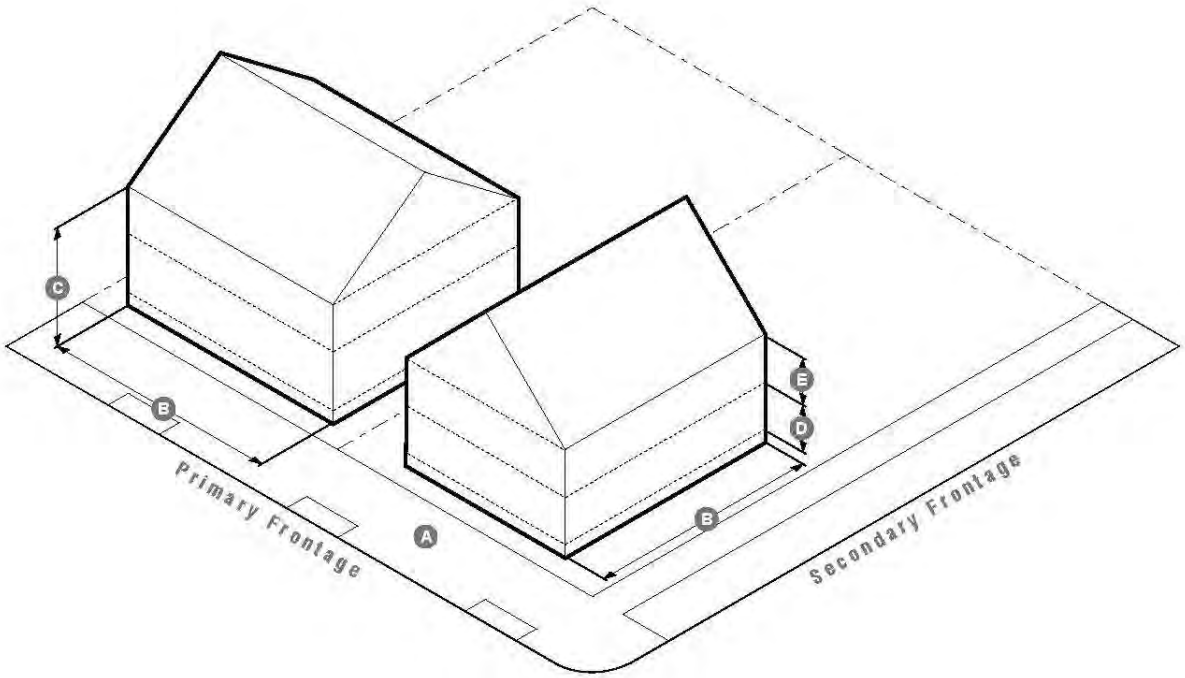

a. DESCRIPTION

A moderately scaled building type comprised of up to 12 units.

b. BUILDING FORM

Building Width	60 ft max	A
Building Length	75 ft max	B
Total Stories	3 stories max	C
First Floor Height	9 ft min, 15 ft max	D
Upper Floor Height	9 ft min, 12 ft max	E
First Floor Elevation	2 ft min	
Components	see D Components	
Roofs	see E Roof Types	
Attachments	none	

c. ALLOWABLE UNITS

12 units max

d. FENESTRATION

First Floor Fenestration	20% min
Upper Floor Fenestration	20% min

e. STANDARDS

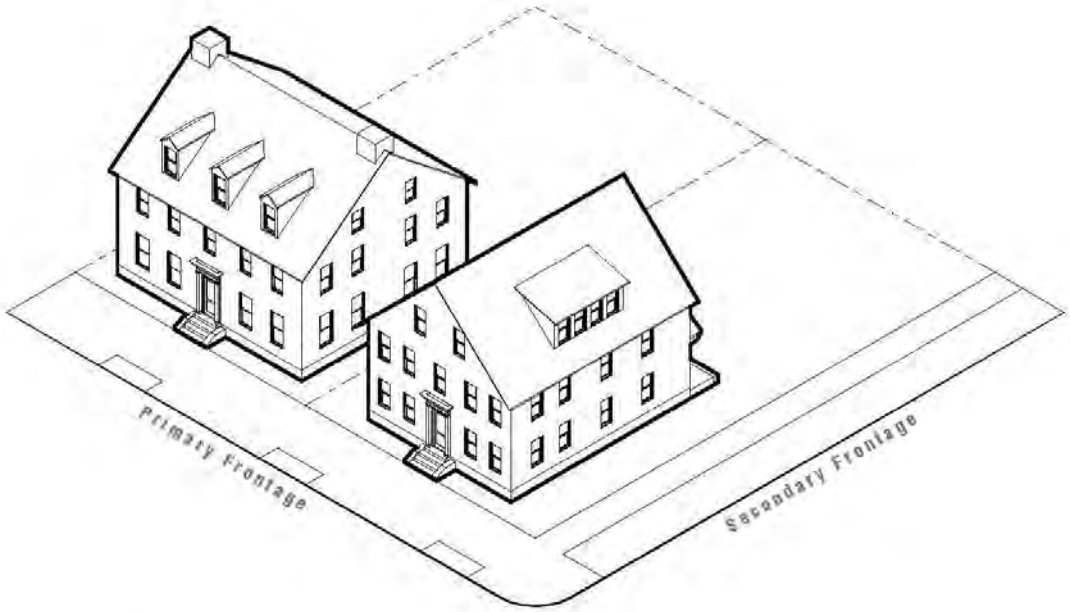

f. MASSING COMPONENTS	
Rear Addition	●
Side Wing	●
Connector	●
Porte-Cochere	●
Tower	●

g. ARCHITECTURAL COMPONENTS	
Porch	●
Gallery	●
Stoop	●
Cross Gable	●
Shed Dormer	●
Dormer Window	●
Bay Window	●
Balcony	●
Turret	●
Portico	●
Canopy	●
Deck	●
Roof Deck	●
Cupola	●

h. ROOFS	
Gable Roof	●
Hipped Roof	●
Mansard Roof	●
Gambrel Roof	●

● Permitted

8. TOWNHOUSE

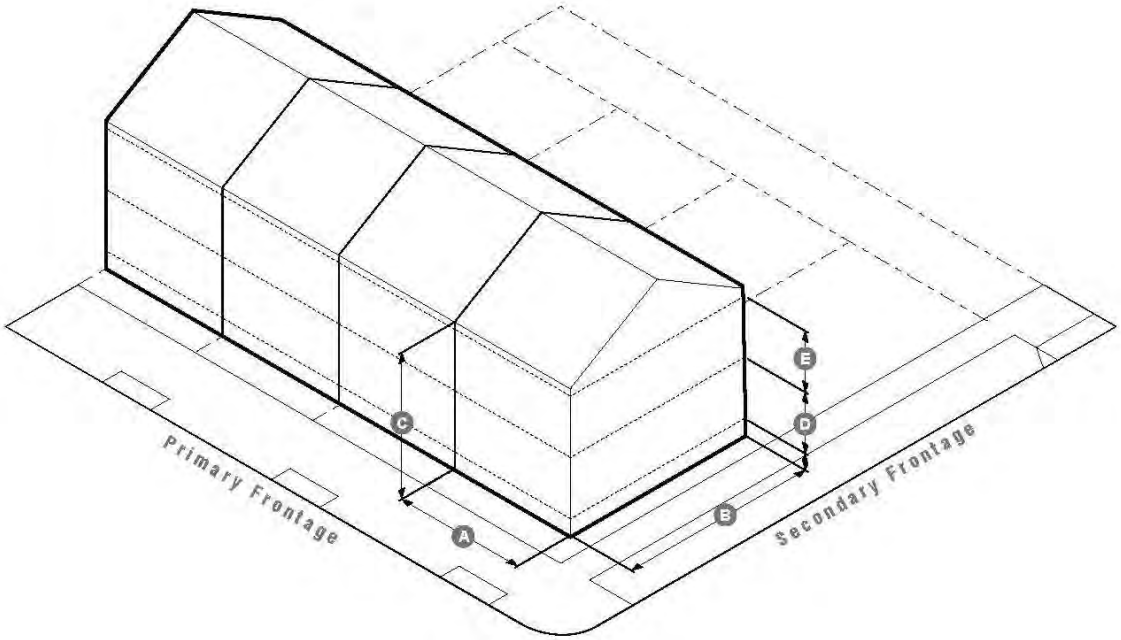

a. DESCRIPTION

A small- to medium-sized attached building type comprised of up to 3 units.

b. BUILDING FORM

Building Width	18 ft min, 36 ft max	A
Building Length	50 ft max	B
Total Stories	2 min, 3 max	C
First Floor Height	9 ft min, 12 ft max	D
Upper Floor Height	9 ft min, 12 ft max	E
First Floor Elevation	2 ft min	
Components	see Section D Components	
Roofs	see Section E Roof Types	
Attachments	1 side min	

c. ALLOWABLE UNITS

3 unit max

d. FENESTRATION

First Floor Fenestration	20% min
Upper Floor Fenestration	20% min

e. STANDARDS

1. A townhouse must attach to a townhouse or live/work flex on at least one side.
2. A maximum of 6 townhouses are allowed to attach.
3. All buildings in a single grouping of attached townhouses must maintain the same front setback.

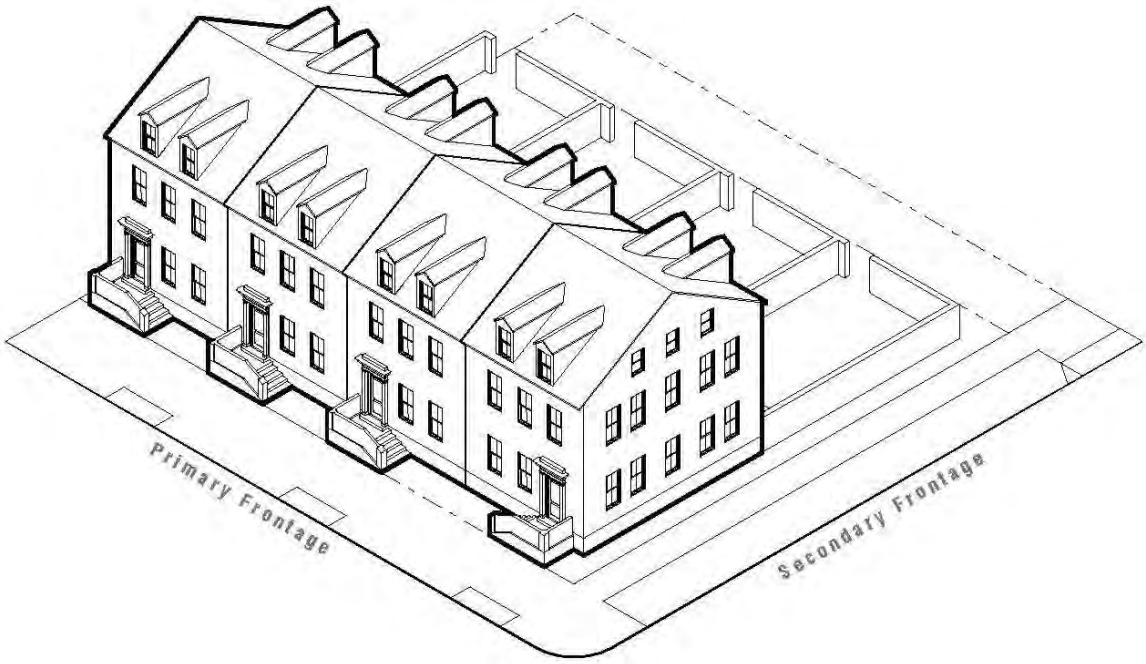

f. MASSING COMPONENTS	
Rear Addition	●
Side Wing	●
Connector	●
Porte-Cochere	●

g. ARCHITECTURAL COMPONENTS	
Porch	●
Gallery	●
Stoop	●
Cross Gable	●
Shed Dormer	●
Dormer Window	●
Bay Window	●
Balcony	●
Turret	●
Portico	●
Canopy	●
Deck	●
Roof Deck	●

h. ROOFS	
Gable Roof	●
Hipped Roof	●
Shed Roof	●
Flat Roof	●

● Permitted

9. SHOPHOUSE

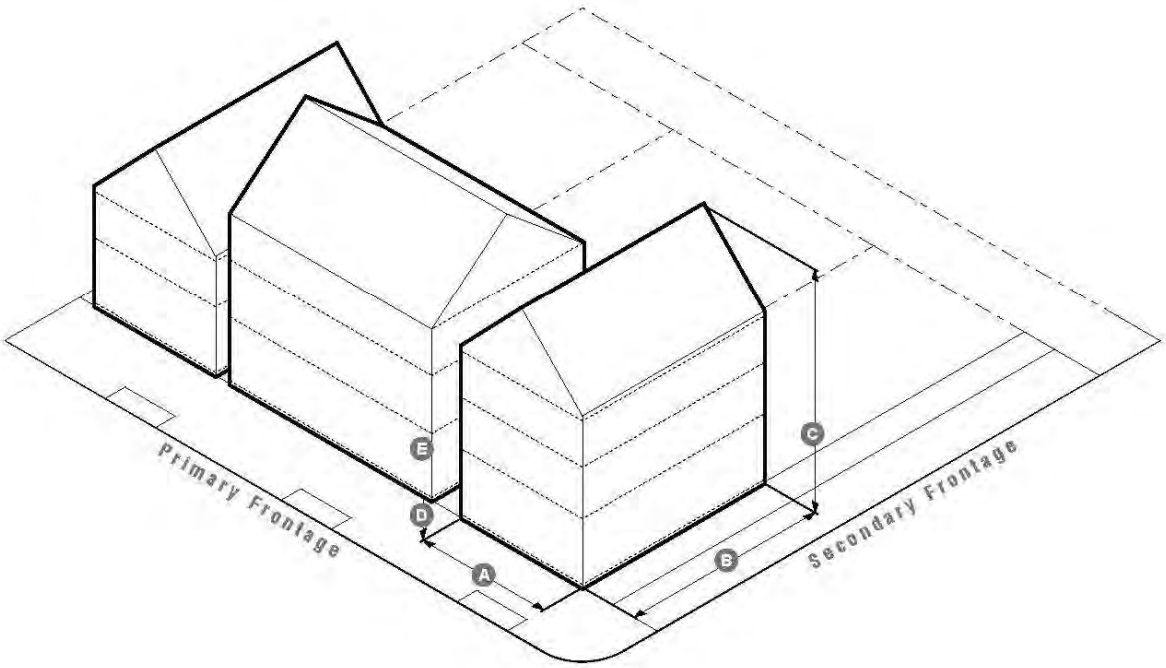

a. DESCRIPTION

A small building with a shopfront and up to 5 units.

b. BUILDING FORM

Building Width	36 ft max	A
Building Length	60 ft max	B
Total Stories	3 max	C
First Floor Height	12 ft min, 18 ft max	D
Upper Floor Height	9 ft min, 12 ft max	E
First Floor Elevation	0 ft min	
Components	see Section D Components	
Roof	see Section E Roof Types	
Attachments	1 side max	

c. ALLOWABLE UNITS

5 units max

d. FENESTRATION

Shopfront	Required
First Floor Fenestration	20% min
Upper Floor Fenestration	20% min

e. STANDARDS

1. Shopfront fenestration is required on the first floor facade of the primary frontage.
2. A porch or gallery may be built on the third floor of a primary frontage provided that there is only one porch or galley below it on either the first or second floor.

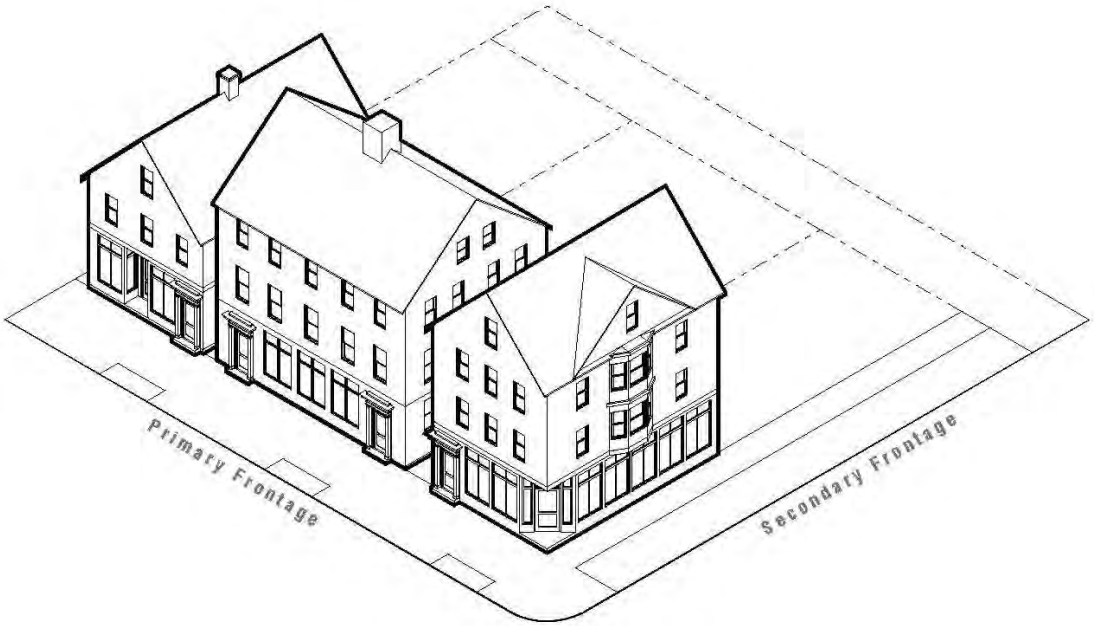

f. MASSING COMPONENTS	
Rear Addition	●
Side Wing	●
Connector	●
Tower	●

g. ARCHITECTURAL COMPONENTS	
Porch	●
Gallery	●
Stoop	●
Cross Gable	●
Shed Dormer	●
Dormer Window	●
Bay Window	●
Balcony	●
Turret	●
Arcade	●
Portico	●
Canopy	●
Deck	●
Roof Deck	●
Cupola	●

h. ROOFS	
Gable Roof	●
Hipped Roof	●
Mansard Roof	●
Gambrel Roof	●

● Permitted

10. LIVE/WORK FLEX

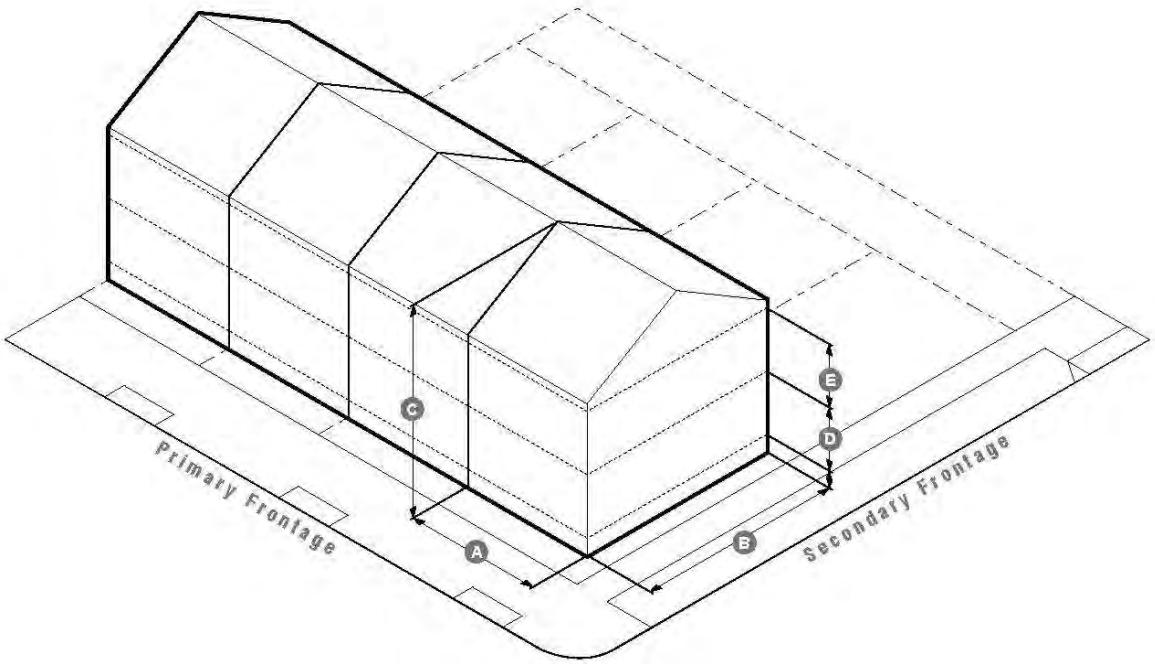

a. DESCRIPTION

A small attached building type with up to 3 units, including an optional shopfront.

b. BUILDING FORM

Building Width	18 ft min, 60 ft max	A
Building Length	60 ft max	B
Total Stories	2 min, 3 max	C
First Floor Height	9 ft min, 14 ft max	D
Upper Floor Height	9 ft min, 12 ft max	E
First Floor Elevation	0 ft min	
Components	see Section D Components	
Roofs	see Section E Roof Types	
Attachments	1 side min	

c. ALLOWABLE UNITS

3 units max

d. FENESTRATION

Shopfront	Optional
First Floor Fenestration	20% min
Upper Floor Fenestration	20% min

e. STANDARDS

1. A live/work flex building must attach to a townhouse or live/work flex on at least one side.
2. A maximum of 6 live/work flex buildings are allowed to attach.
3. All buildings in a single grouping of attached live/work flex buildings must maintain the same front setback.

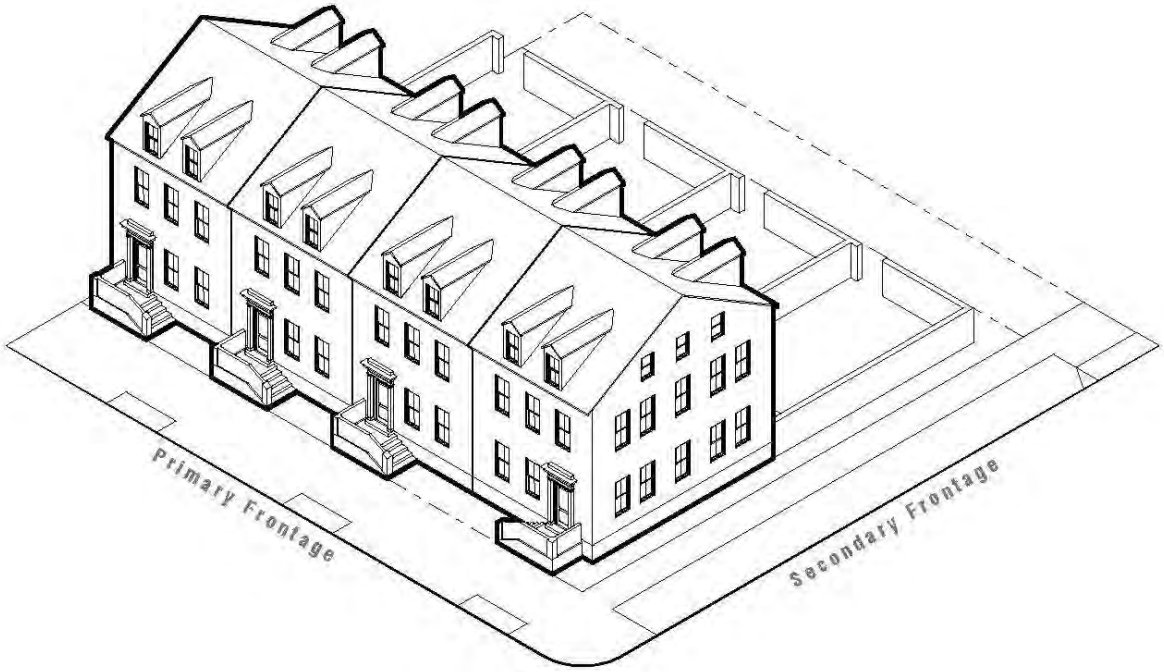

f. MASSING COMPONENTS	
Rear Addition	●
Side Wing	●
Connector	●
Porte-Cochere	●

g. ARCHITECTURAL COMPONENTS	
Porch	●
Gallery	●
Stoop	●
Cross Gable	●
Shed Dormer	●
Dormer Window	●
Bay Window	●
Balcony	●
Turret	●
Portico	●
Canopy	●
Deck	●
Roof Deck	●

h. ROOFS	
Gable Roof	●
Hipped Roof	●
Shed Roof	●
Flat Roof	●

● Permitted

9. SHOPHOUSE

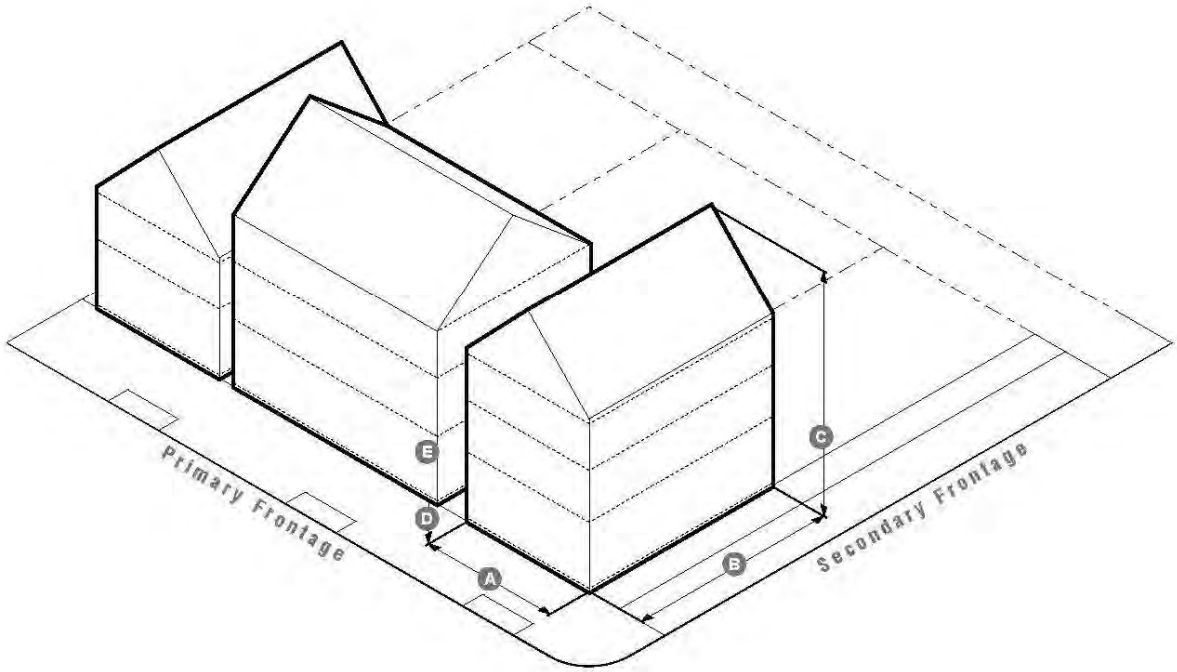

a. DESCRIPTION

A small building with a shopfront and up to 5 units.

b. BUILDING FORM

Building Width	36 ft max	A
Building Length	60 ft max	B
Total Stories	3 max	C
First Floor Height	12 ft min, 18 ft max	D
Upper Floor Height	9 ft min, 12 ft max	E
First Floor Elevation	0 ft min	
Components	see Section D Components	
Roof	see Section E Roof Types	
Attachments	1 side max	

c. ALLOWABLE UNITS

5 units max

d. FENESTRATION

Shopfront	Required
First Floor Fenestration	20% min
Upper Floor Fenestration	20% min

e. STANDARDS

1. Shopfront fenestration is required on the first floor facade of the primary frontage.
2. A porch or gallery may be built on the third floor of a primary frontage provided that there is only one porch or galley below it on either the first or second floor.

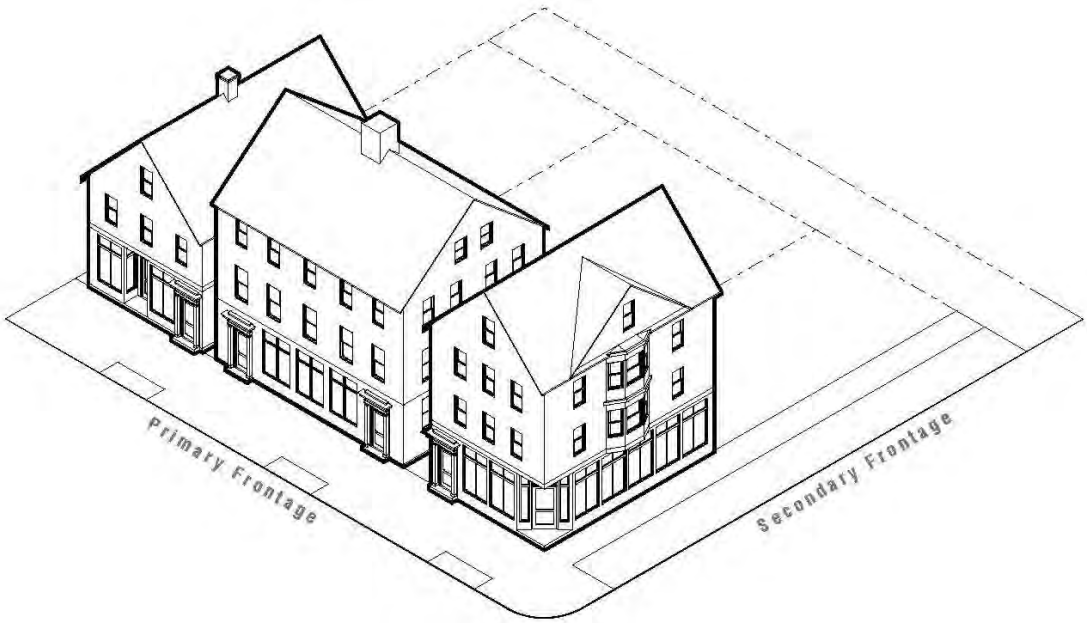

f. MASSING COMPONENTS	
Rear Addition	●
Side Wing	●
Connector	●
Tower	●

g. ARCHITECTURAL COMPONENTS	
Porch	●
Gallery	●
Stoop	●
Cross Gable	●
Shed Dormer	●
Dormer Window	●
Bay Window	●
Balcony	●
Turret	●
Arcade	●
Portico	●
Canopy	●
Deck	●
Roof Deck	●
Cupola	●

h. ROOFS	
Gable Roof	●
Hipped Roof	●
Mansard Roof	●
Gambrel Roof	●

● Permitted

10. LIVE/WORK FLEX

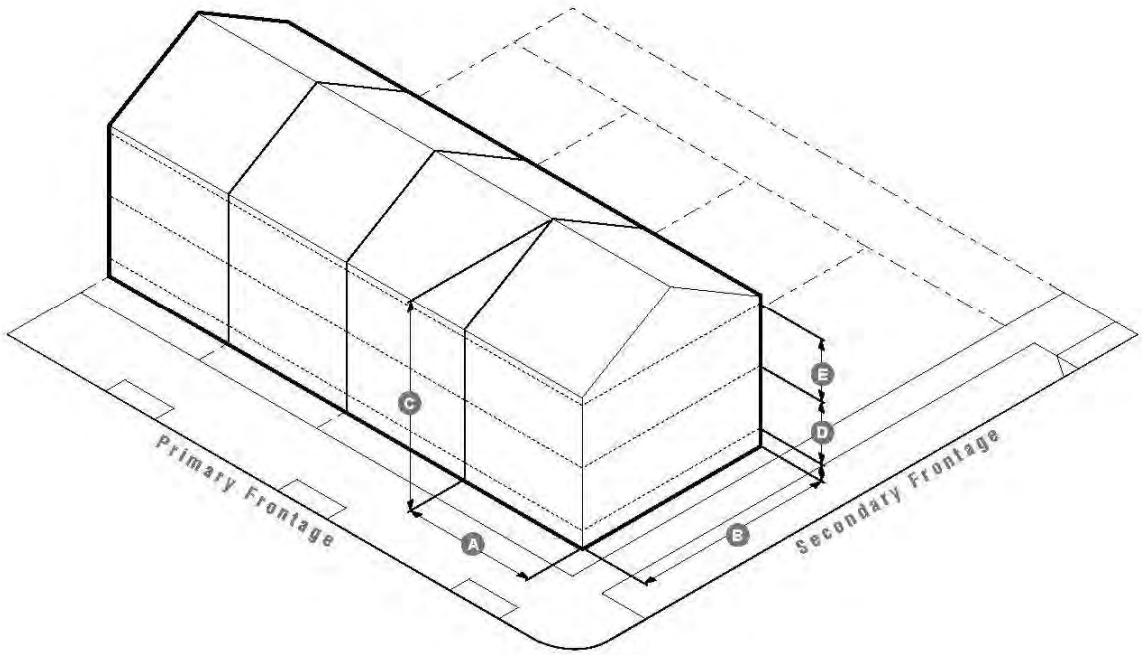

a. DESCRIPTION

A small attached building type with up to 3 units, including an optional shopfront.

b. BUILDING FORM

Building Width	18 ft min, 60 ft max	A
Building Length	60 ft max	B
Total Stories	2 min, 3 max	C
First Floor Height	9 ft min, 14 ft max	D
Upper Floor Height	9 ft min, 12 ft max	E
First Floor Elevation	0 ft min	
Components	see Section D Components	
Roofs	see Section E Roof Types	
Attachments	1 side min	

c. ALLOWABLE UNITS

3 units max

d. FENESTRATION

Shopfront	Optional
First Floor Fenestration	20% min
Upper Floor Fenestration	20% min

e. STANDARDS

1. A live/work flex building must attach to a townhouse or live/work flex on at least one side.
2. A maximum of 6 live/work flex buildings are allowed to attach.
3. All buildings in a single grouping of attached live/work flex buildings must maintain the same front setback.

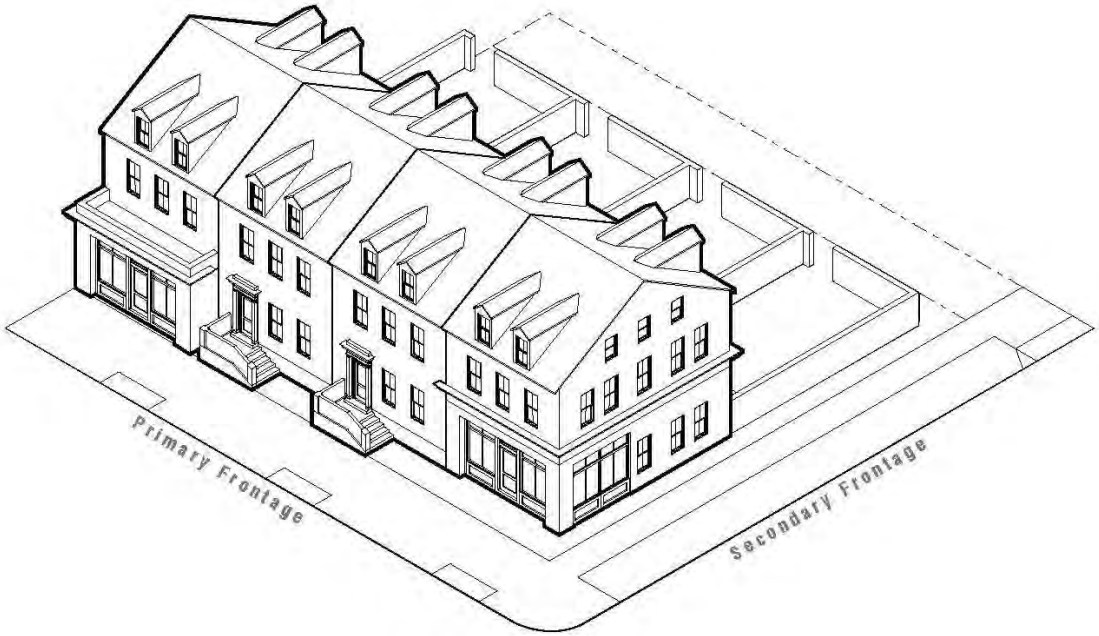

I. MASSING COMPONENTS	
Rear Addition	●
Side Wing	●
Connector	●
Extended Shopfront	●

g. ARCHITECTURAL COMPONENTS	
Porch	●
Gallery	●
Stoop	●
Cross Gable	●
Shed Dormer	●
Dormer Window	●
Bay Window	●
Balcony	●
Turret	●
Portico	●
Canopy	●
Deck	●
Roof Deck	●

h. ROOFS	
Gable Roof	●
Hipped Roof	●
Shed Roof	●
Flat Roof	●

● Permitted

11. SHOP

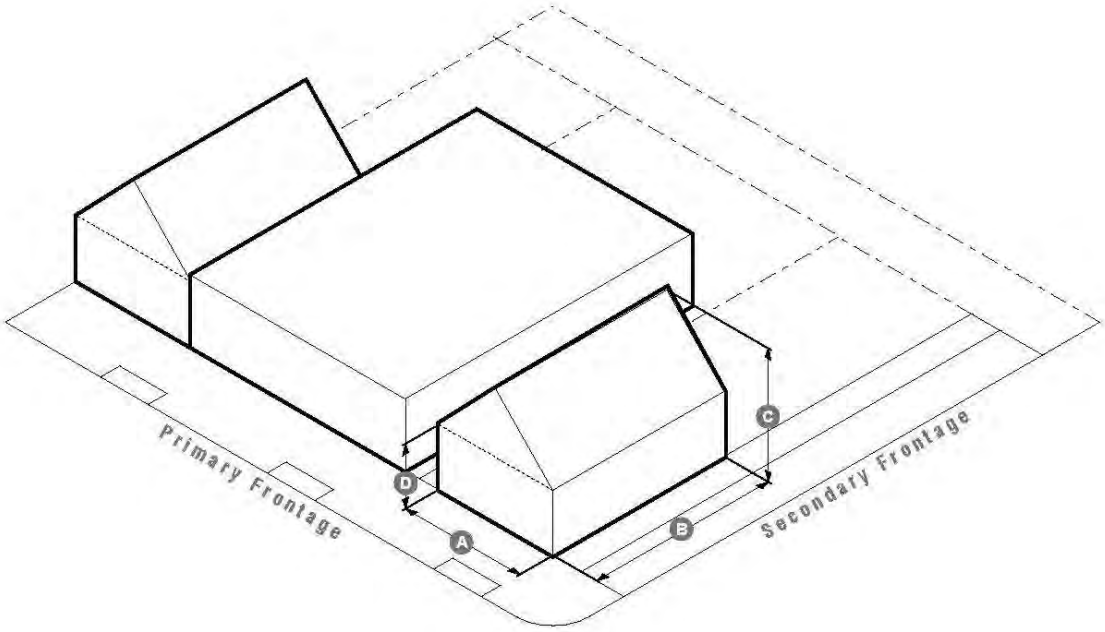

a. DESCRIPTION

A single story building with 1 unit and a required shopfront.

b. BUILDING FORM

Building Width	18 ft min, 90 ft max	A
Building Length	60 ft max	B
Total Stories	1 max	C
First Floor Height	20 ft max	D
Upper Floor Height	n/a	E
First Floor Elevation	0 ft min	
Components	see Section D Components	
Roofs	see Section E Roof Types	
Attachments	1 side max	

c. ALLOWABLE UNITS

1 unit max

d. FENESTRATION

Shopfront	Required
First Floor Fenestration	20% min
Upper Floor Fenestration	n/a

e. STANDARDS

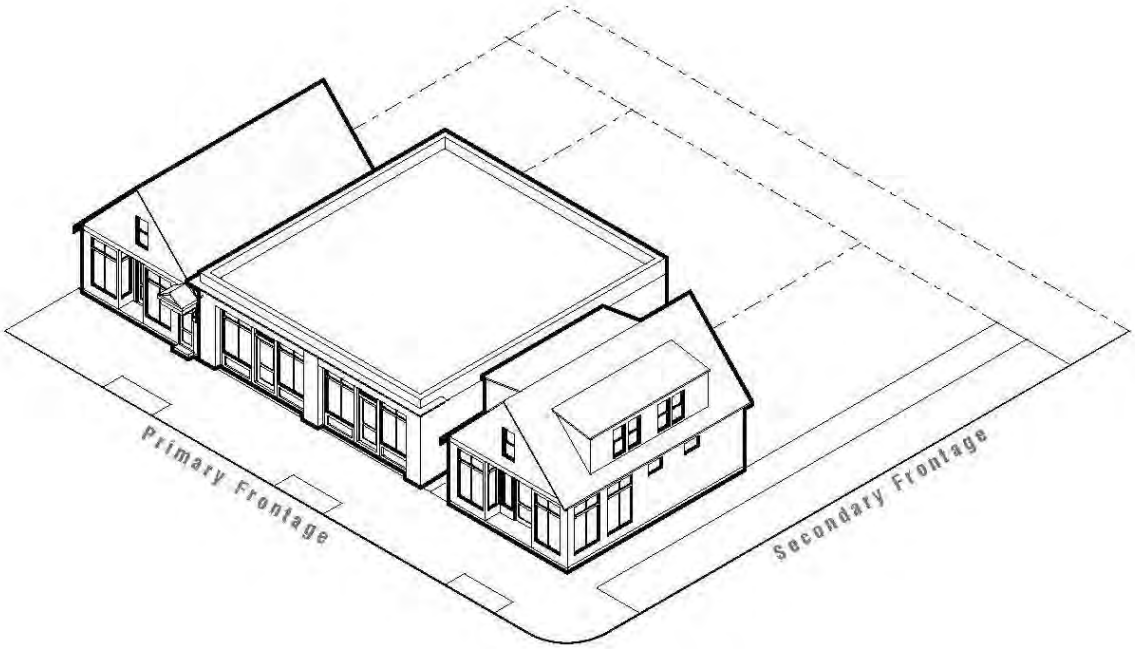

f. MASSING COMPONENTS	
Rear Addition	●
Side Wing	●

g. ARCHITECTURAL COMPONENTS	
Porch	●
Stoop	●
Cross Gable	●
Shed Dormer	●
Dormer Window	●
Bay Window	●
Arcade	●
Portico	●
Canopy	●
Deck	●
Roof Deck	●
Cupola	●

h. ROOFS	
Gable Roof	●
Hipped Roof	●
Gambrel Roof	●
Shed Roof	●
Flat Roof	●

● Permitted

12. INN

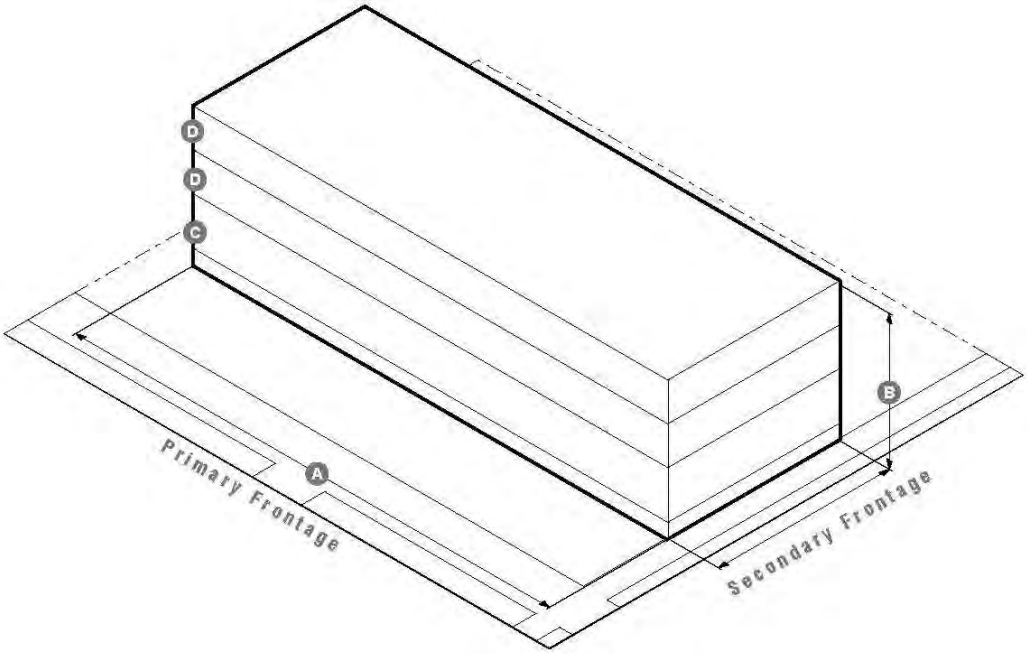

a. DESCRIPTION

A large building providing multiple units, common area living, dining and cooking facilities, and that has a continuous front porch.

b. BUILDING FORM

Building Length	120 ft max	A
Total Building Area	20,000 sf max	
Total Stories	3 max	B
First Floor Height	10 ft min, 15 ft max	C
Upper Floor Height	9 ft min, 12 ft max	D
First Floor Elevation	2 ft min	
Components	see Section D Components	
Roofs	see Section E Roof Types	
Attachments	none	

c. ALLOWABLE UNITS

varies

d. FENESTRATION

First Floor Fenestration	20% min
Upper Floor Fenestration	20% min

e. STANDARDS

1. The inn building floor plate may not exceed 15,000 sf.
2. The inn building may front a primary street provided the front porch is continuous along the frontage and is not enclosed.

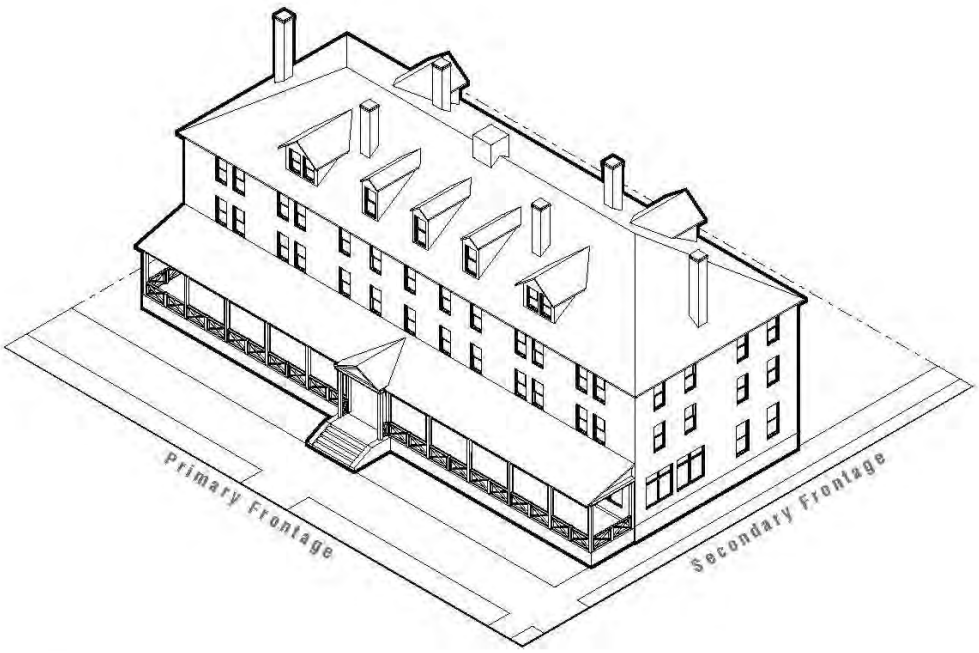

f. MASSING COMPONENTS	
Rear Addition	●
Side Wing	●
Connector	●
Extended Shopfront	●
Porte-Cochere	●
Tower	●

g. ARCHITECTURAL COMPONENTS	
Porch	●
Gallery	●
Stoop	●
Cross Gable	●
Shed Dormer	●
Dormer Window	●
Bay Window	●
Balcony	●
Turret	●
Arcade	●
Portico	●
Canopy	●
Deck	●
Roof Deck	●
Cupola	●

h. ROOFS	
Gable Roof	●
Hipped Roof	●
Mansard Roof	●
Gambrel Roof	●
Flat Roof	●

● Permitted

13. FABRICATION BUILDING

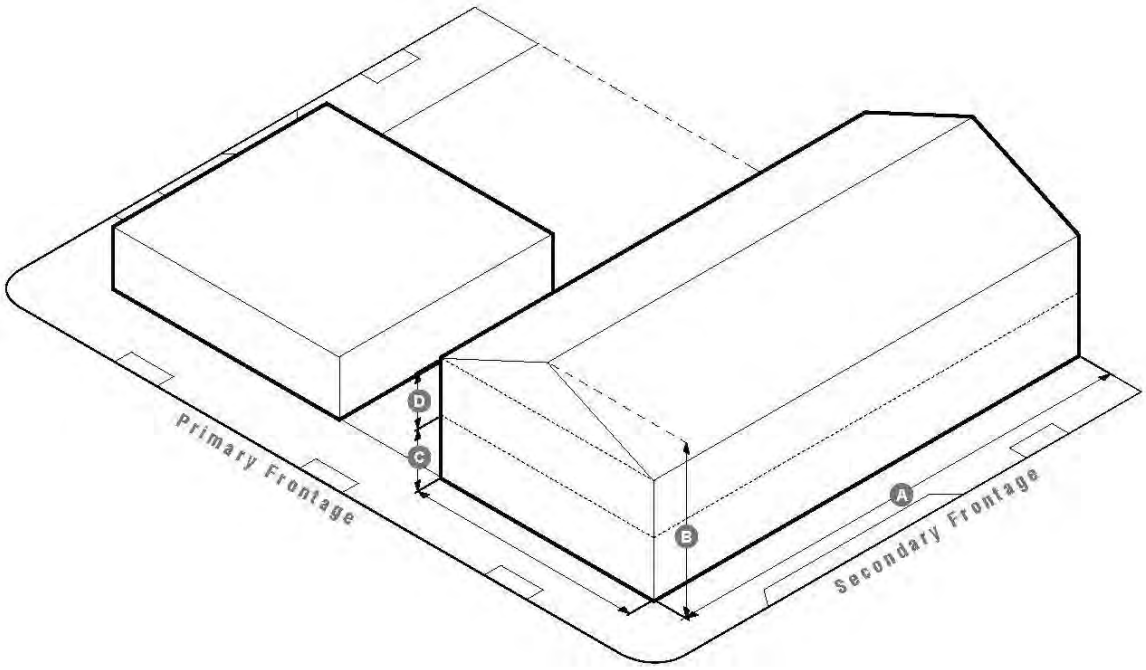

a. DESCRIPTION

A large floor plate, building type with large open floor plans, and optional shopfronts, providing multiple units.

b. BUILDING FORM

Building Length	150 ft max	A
Building Area	30,000 sf max	
Total Stories	2 max	B
First Floor Height	9 ft min	C
Upper Floor Height	9 ft min	D
First Floor Elevation	0 ft min	
Components	see Section D Components	
Roofs	see Section E Roof Types	
Attachments	2 sides max	

c. ALLOWABLE UNITS

1 unit min

d. FENESTRATION

Shopfront	Optional
First Floor Fenestration	30%
Upper Floor Fenestration	30%

e. STANDARDS

1. Fabrication buildings must be oriented perpedicular to the primary thoroughfare (excluding alleys).
2. The fabrication building floor plate may not exceed 15,000 sf.
3. Shed dormers may ignore the gable end and ridge line setback in order to form a continuous monitor style roof along the entirety of the ridge beam.

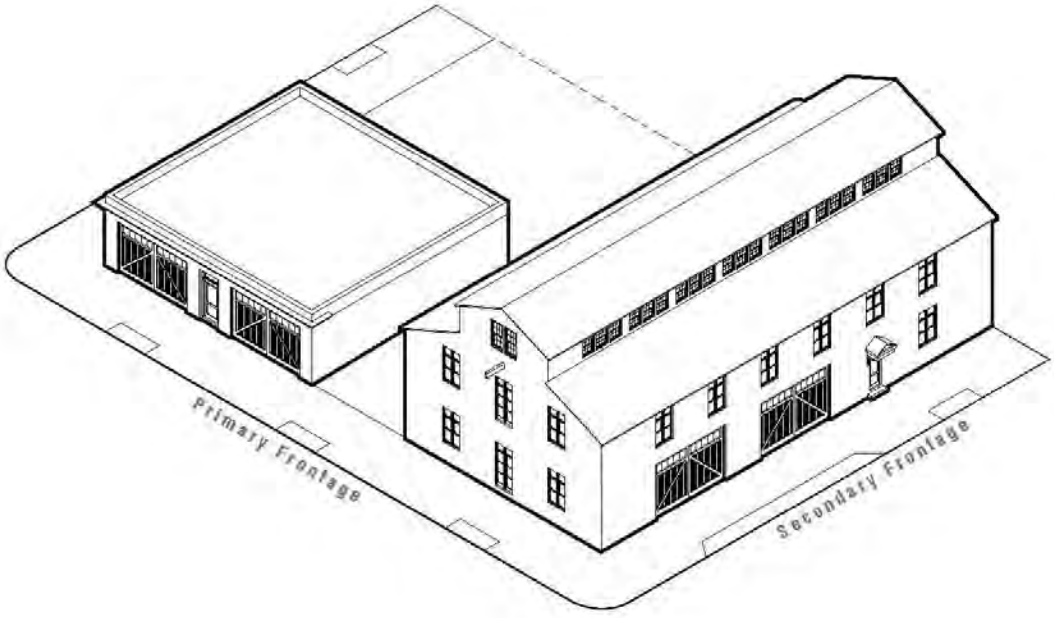

I. MASSING COMPONENTS	
Rear Addition	●
Side Wing	●
Connector	●
Extended Shopfront	●
Porte-Cochere	●
Tower	●

g. ARCHITECTURAL COMPONENTS	
Porch	●
Gallery	●
Stoop	●
Cross Gable	●
Shed Dormer	●
Dormer Window	●
Bay Window	●
Balcony	●
Arcade	●
Portico	●
Canopy	●
Deck	●
Cupola	●

h. ROOFS	
Gable Roof	●
Hipped Roof	●
Gambrel Roof	●
Shed Roof	●
Flat Roof	●

● Permitted

14. MIXED-USE BUILDING

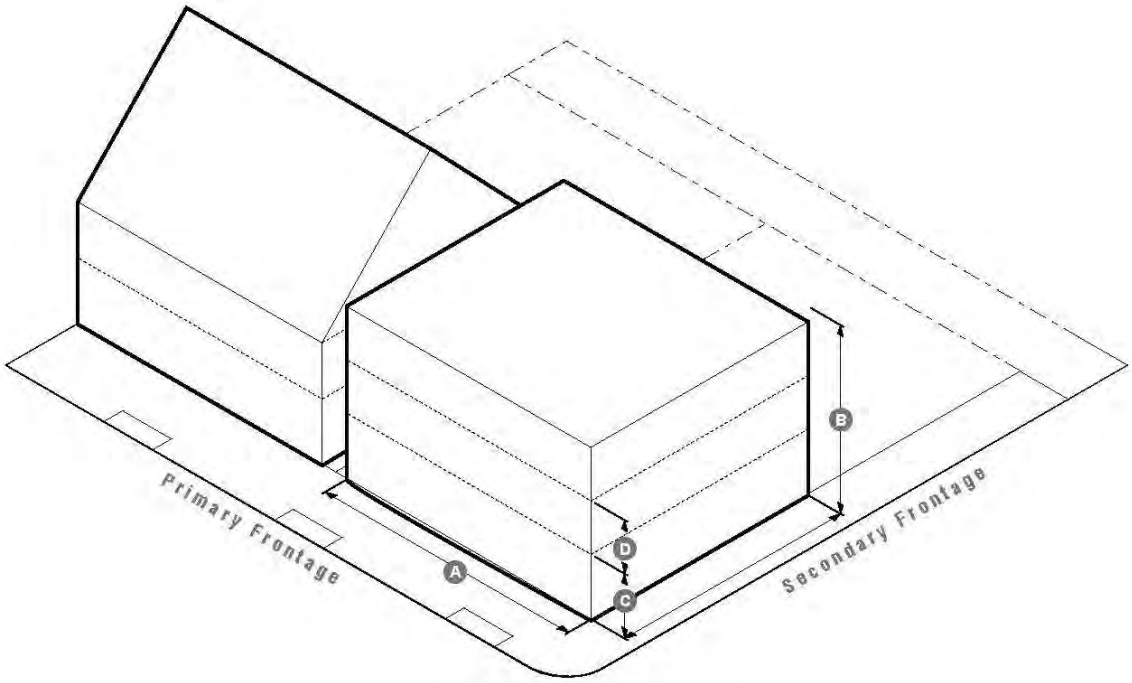

a. DESCRIPTION

A variably-sized building type with a required shopfront providing multiple units.

b. BUILDING FORM

Frontage Length	100 ft max	A
Ground Floor Plate Area	10,000 sf max	
Upper Floor Plate Area	10,000 sf max	
Total Stories	3 max	B
First Floor Height	12 ft min, 20 ft max	C
Upper Floor Height	9 ft min, 12 ft max	D
First Floor Elevation	0 ft max	
Components	see Section D Components	
Roofs	see Section E Roof Types	
Attachments	2 sides max	

c. ALLOWABLE UNITS

Units per floor	10 units max

d. FENESTRATION

Shopfront	Required
First Floor Fenestration	70% min
Upper Floor Fenestration	20% min

e. STANDARDS

1. Shopfronts are required on the first floor of the primary frontage.

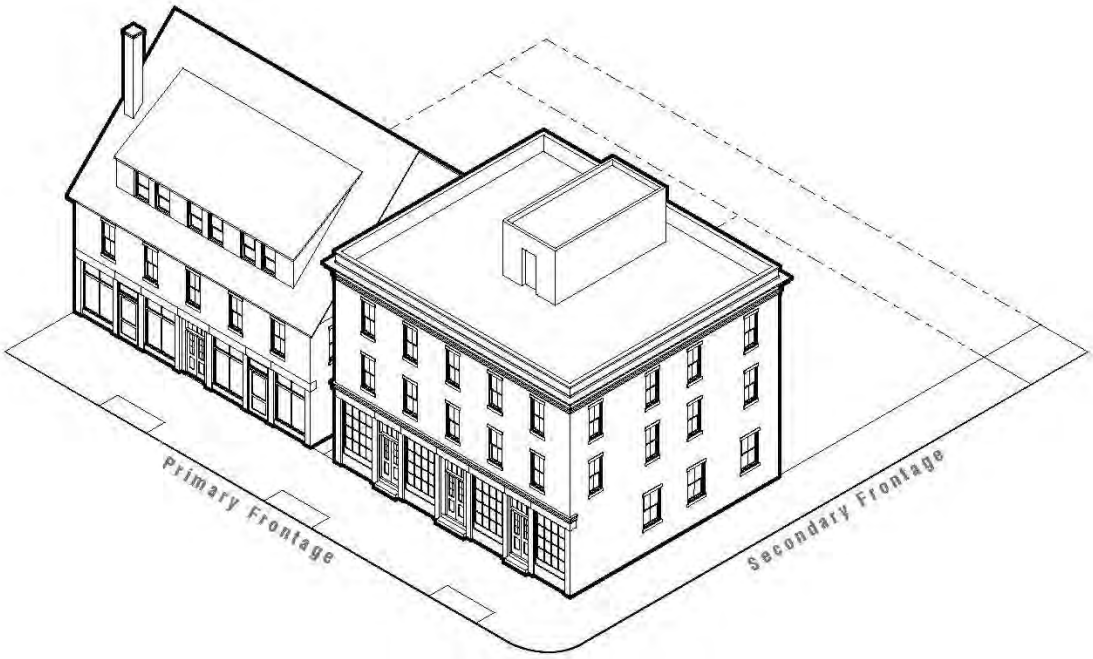

I. MASSING COMPONENTS	
Rear Addition	●
Side Wing	●
Connector	●
Extended Shopfront	●

g. ARCHITECTURAL COMPONENTS	
Porch	●
Gallery	●
Stoop	●
Cross Gable	●
Shed Dormer	●
Dormer Window	●
Bay Window	●
Balcony	●
Turret	●
Arcade	●
Portico	●
Canopy	●
Deck	●
Roof Deck	●
Cupola	●

h. ROOFS	
Gable Roof	●
Hipped Roof	●
Mansard Roof	●
Gambrel Roof	●
Shed Roof	●
Flat Roof	●

● Permitted

15. CIVIC BUILDING

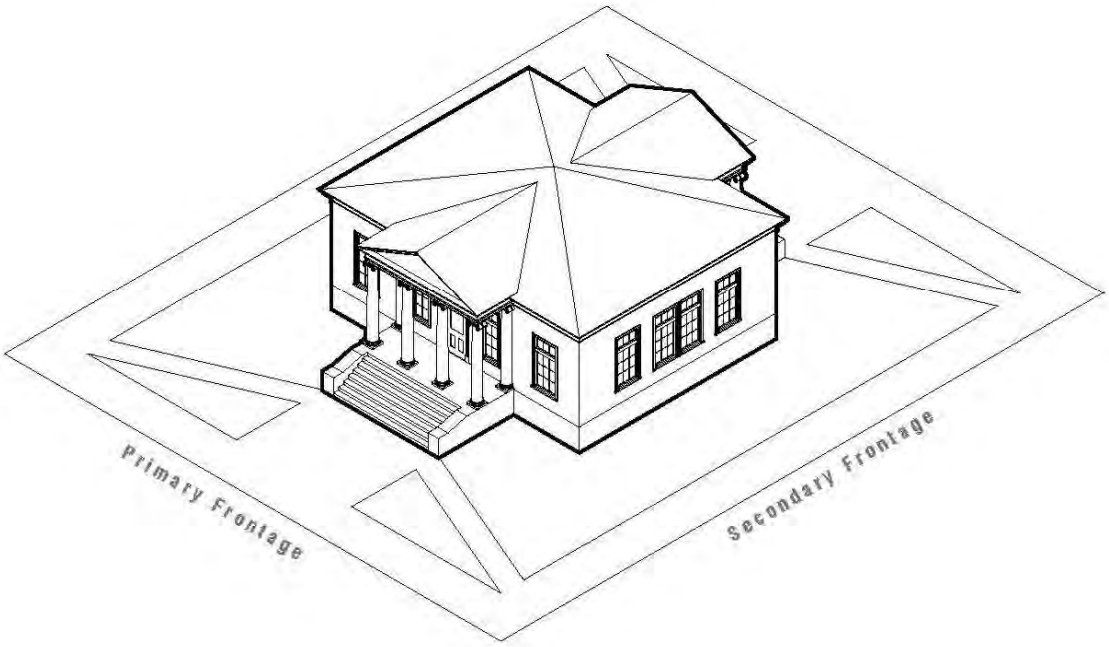

a. DESCRIPTION

A public building of high design and construction quality, usually a landmark.

b. BUILDING FORM

Building Length	100 ft max
Building Area	50,000 sf max
Total Stories	3 max
First Floor Height	15 ft min
Upper Floor Height	12 ft min
First Floor Elevation	0 ft min
Components	see Section Components
Roofs	see Section Roof Types (3)
Attachments	2 sides max

c. ALLOWABLE UNITS

1 unit min

d. FENESTRATION

First Floor Fenestration	20% min (2)
Upper Floor Fenestration	20% min (2)

e. STANDARDS

1. Uses in this building must be associated with tax-exempt organizations, such as museums, government, religious, educational institutions, etc. and provide a tangible civic benefit and be open to the public.
2. The Permitting Authority may waive window and door requirements for civic uses that require no windows for much of their exterior (such as art museums).
3. Civic buildings are exempt from roof system regulation. The values presented in E. Roof Types are guidelines only.

f. MASSING COMPONENTS

Rear Addition	●
Side Wing	●
Connector	●
Porte-Cochere	●
Tower	●

g. ARCHITECTURAL COMPONENTS

Porch	●
Gallery	●
Stoop	●
Cross Gable	●
Shed Dormer	●
Dormer Window	●
Bay Window	●
Balcony	●
Turret	●
Arcade	●
Portico	●
Canopy	●
Deck	●
Cupola	●

h. ROOFS

Gable Roof	●
Hipped Roof	●
Mansard Roof	●
Gambrel Roof	●
Shed Roof	●
Flat Roof	●

● Permitted

TABLE C - ACCESSORY BUILDING TYPE SUMMARY TABLE

1. BARN

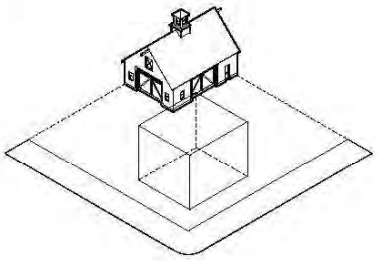

2. FARMSTAND

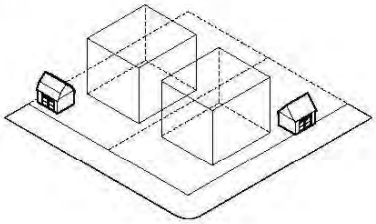

3. CARRIAGE HOUSE

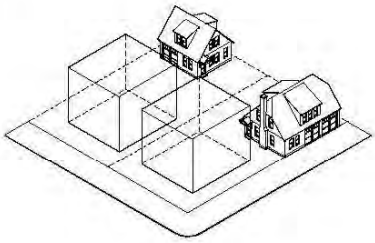

4. FABRICATION SHOP

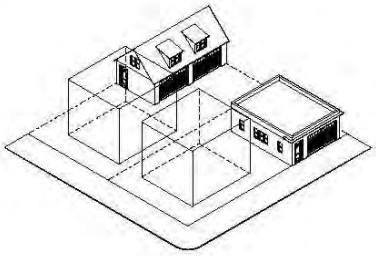

5. ACCESSORY SHOP

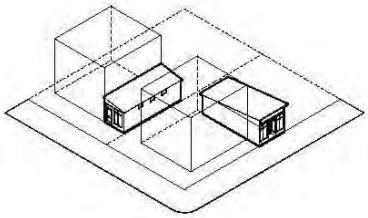

1. BARN

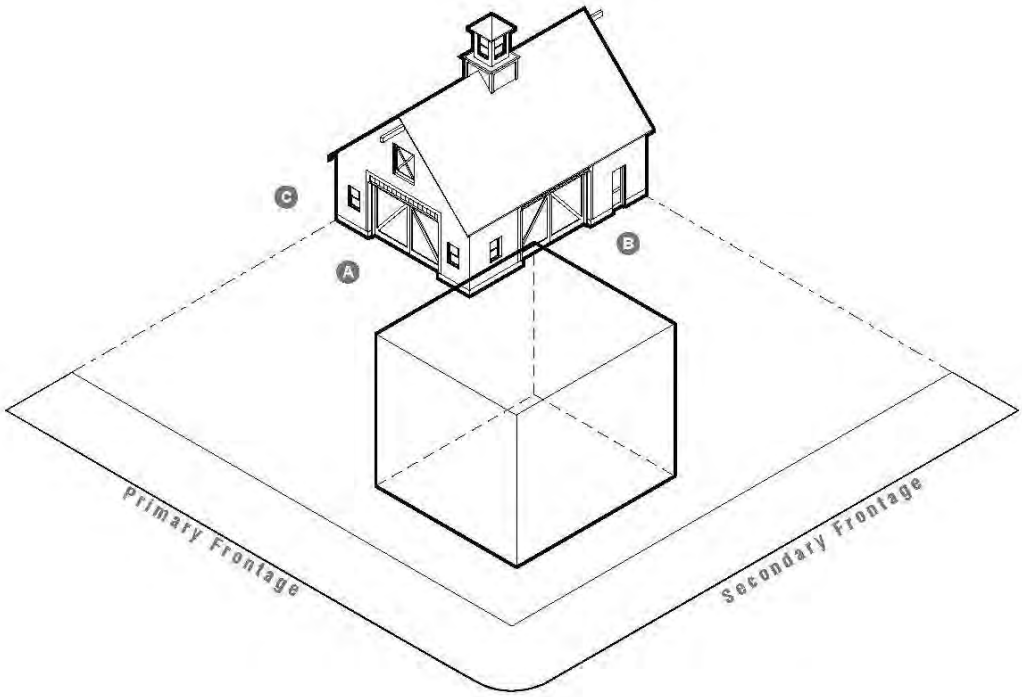

a. DESCRIPTION

A large accessory building that provides space for agricultural, fabrication, storage, or other permitted non-residential uses.

b. ACCESSORY BUILDING PLACEMENT

Primary Front Setback	(1)
Secondary Front Setback	3 ft min
Side Setback	3 ft min
Rear Setback	3 ft min

c. BUILDING FORM

Building Width	36 ft max (2)	A
Building Length	60 ft max (2)	B
Building Floor Plate	10,000 sf max (2)	
Total Stories	2 stories max	C
First Floor Height	n/a	
Upper Floor Height	n/a	
First Floor Elevation	0 ft min	
Roofs	see Section E Roof Types	
Attachments	none	

d. ALLOWABLE UNITS

1 unit max

e. FENESTRATION

First Floor Fenestration	optional
Upper Floor Fenestration	optional

f. STANDARDS

1. Barns must be set back at least 20 ft from the front facade of the primary building.
2. Barns may exceed maximum measurements for length and width when part of a working agricultural operation.
3. Barn doors located within the frontage zone must be sliding or swinging doors.
4. Shed dormers may ignore the gable end and ridge line setback in order to form a continuous monitor style roof along the entirety of the ridge beam.

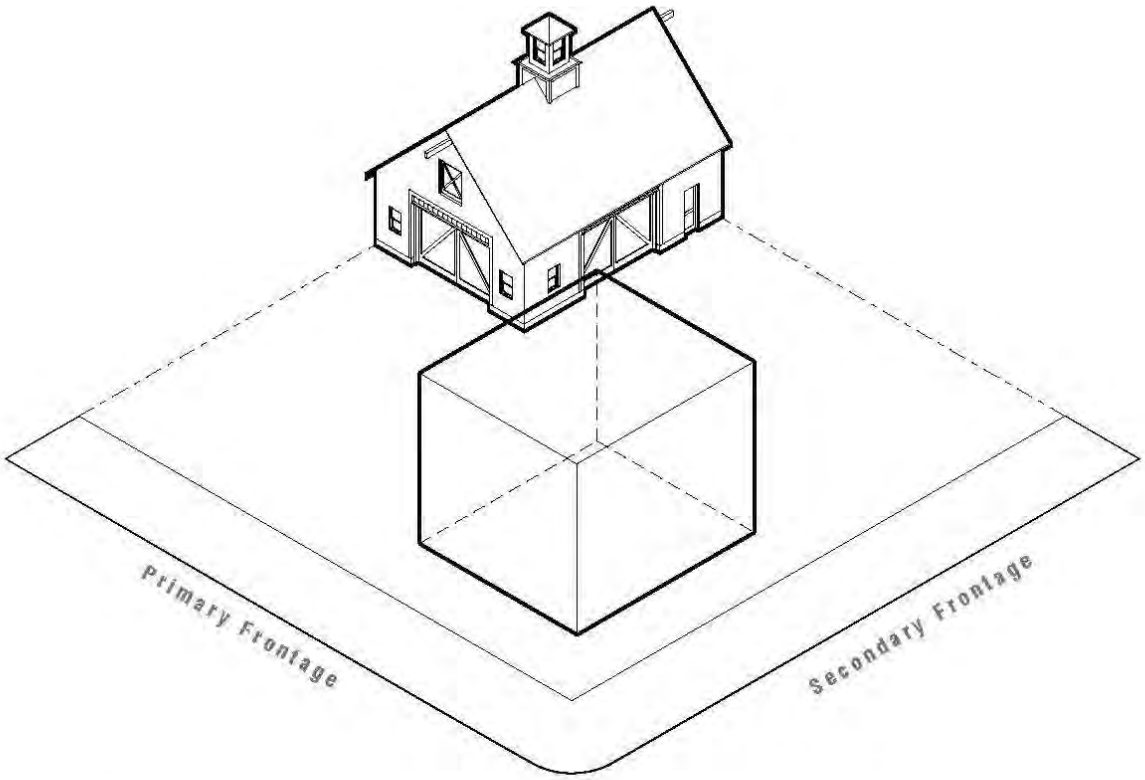

g. MASSING COMPONENTS

Rear Addition	●
Side Wing	●
Connector	●
Shed Dormer	●
Cross Gable	●
Tower	●

h. ARCHITECTURAL COMPONENTS

Stoop	●
Canopy	●
Dormer Window	●
Deck	●
Roof Deck	●
Cupola	●

i. ROOFS

Gable Roof	●
Gambrel Roof	●

● Permitted

2. FARMSTAND

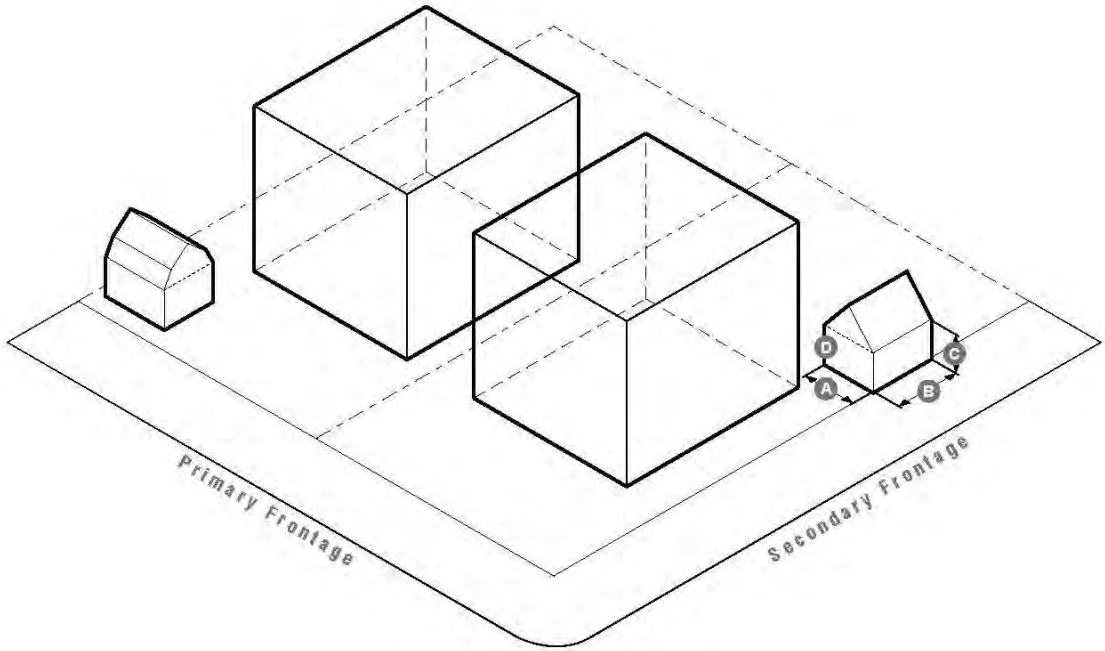

a. DESCRIPTION

An accessory building that is temporary or modular that provides space to sell agricultural products, or that temporarily alleviates a gap in a streetwall with a small commercial space.

b. ACCESSORY BUILDING PLACEMENT

Primary Front Setback	0 ft min
Secondary Front Setback	0 ft min
Side Setback	3 ft min
Rear Setback	3 ft min

c. BUILDING FORM

Building Width	12 ft max	A
Building Length	12 ft max	B
Total Stories	1 story max	C
First Floor Height	10 ft min, 15 ft max	D
Upper Floor Height	n/a	
First Floor Elevation	0 ft min	
Roofs	see Section E Roof Types	
Attachments	none	

d. ALLOWABLE UNITS

1 unit max

e. FENESTRATION

First Floor Fenestration	0% min
Upper Floor Fenestration	0% min

f. STANDARDS

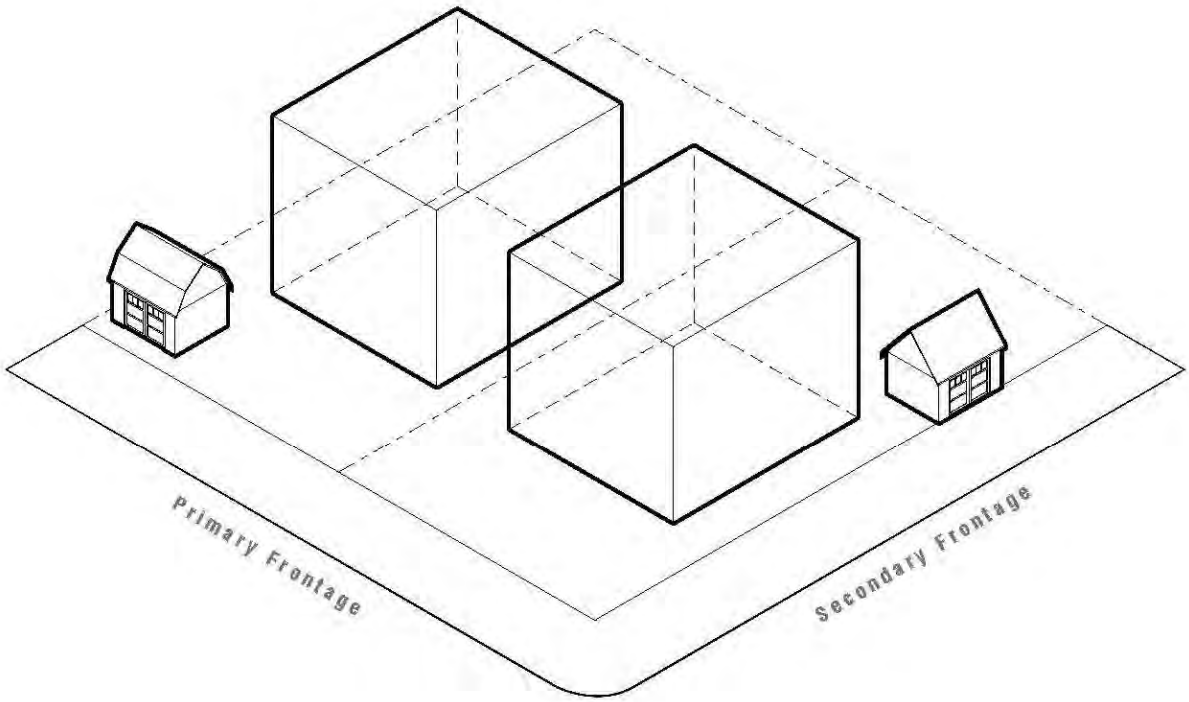

g. MASSING COMPONENTS	
Porch	●
Shed Dormer	●
Cross Gable	●

h. ARCHITECTURAL COMPONENTS	
Dormer Window	●

i. ROOFS	
Gable Roof	●
Hipped Roof	●
Gambrel Roof	●
Shed Roof	●
Flat Roof	●

● Permitted

3. CARRIAGE HOUSE

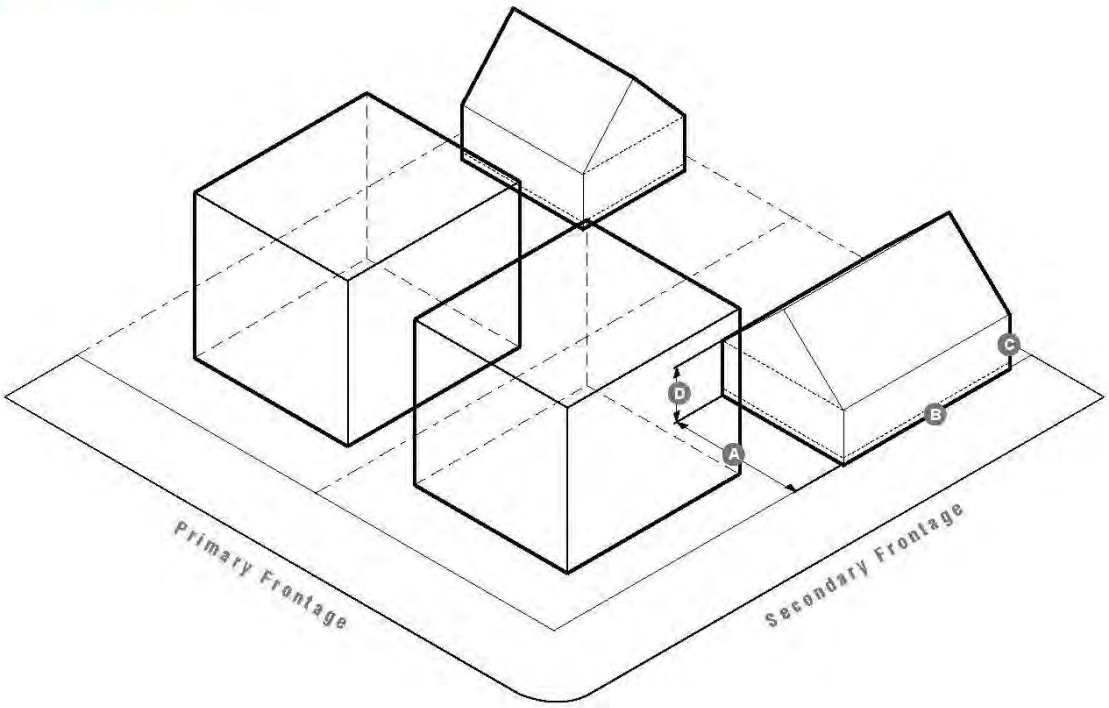

a. DESCRIPTION

An accessory building that provides space for parking, a workshop, an accessory unit, or a combination thereof.

b. ACCESSORY BUILDING PLACEMENT

Primary Front Setback	(1)
Secondary Front Setback	3 ft min
Side Setback	3 ft min
Rear Setback	3 ft min

c. BUILDING FORM

Building Width	24 ft max	A
Building Length	36 ft max	B
Total Stories	2 stories max	C
First Floor Height	9 ft min, 15 ft max	D
Upper Floor Height	9 ft min, 12 ft max	
First Floor Elevation	0 ft min	
Roofs	see Section E Roof Types	
Attachments	1 max	

d. ALLOWABLE UNITS

1 unit min

e. FENESTRATION

First Floor Fenestration	20% min
Upper Floor Fenestration	20% min

f. STANDARDS

1. The carriage house must be set back at least 20 ft from the front facade of the primary building.

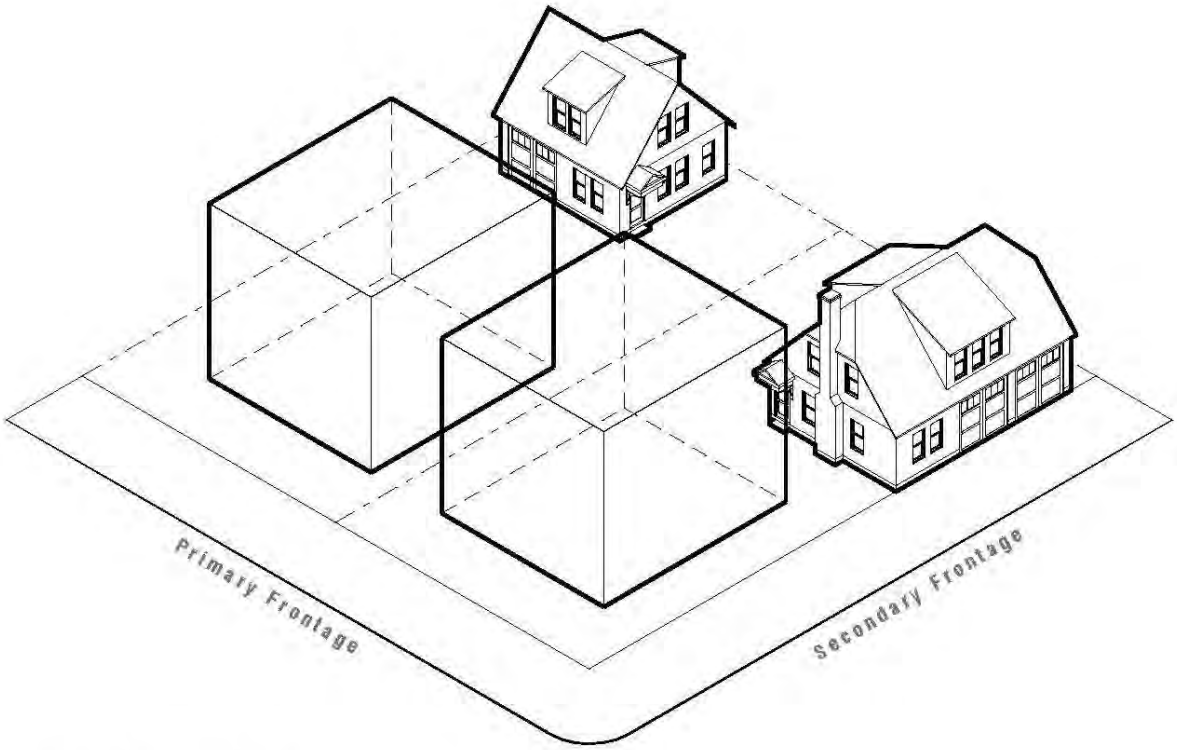

g. MASSING COMPONENTS

Porch	●
Gallery	●
Connector	●
Shed Dormer	●
Cross Gable	●
Porte-Cochere	●

h. ARCHITECTURAL COMPONENTS

Stoop	●
Canopy	●
Portico	●
Balcony	●
Bay Window	●
Dormer window	●
Deck	●
Roof Deck	●
Cupola	●

i. ROOFS

Hipped Roof	●
Gambrel Roof	●
Shed Roof	●
Flat Roof	●

● Permitted

4. FABRICATION SHOP

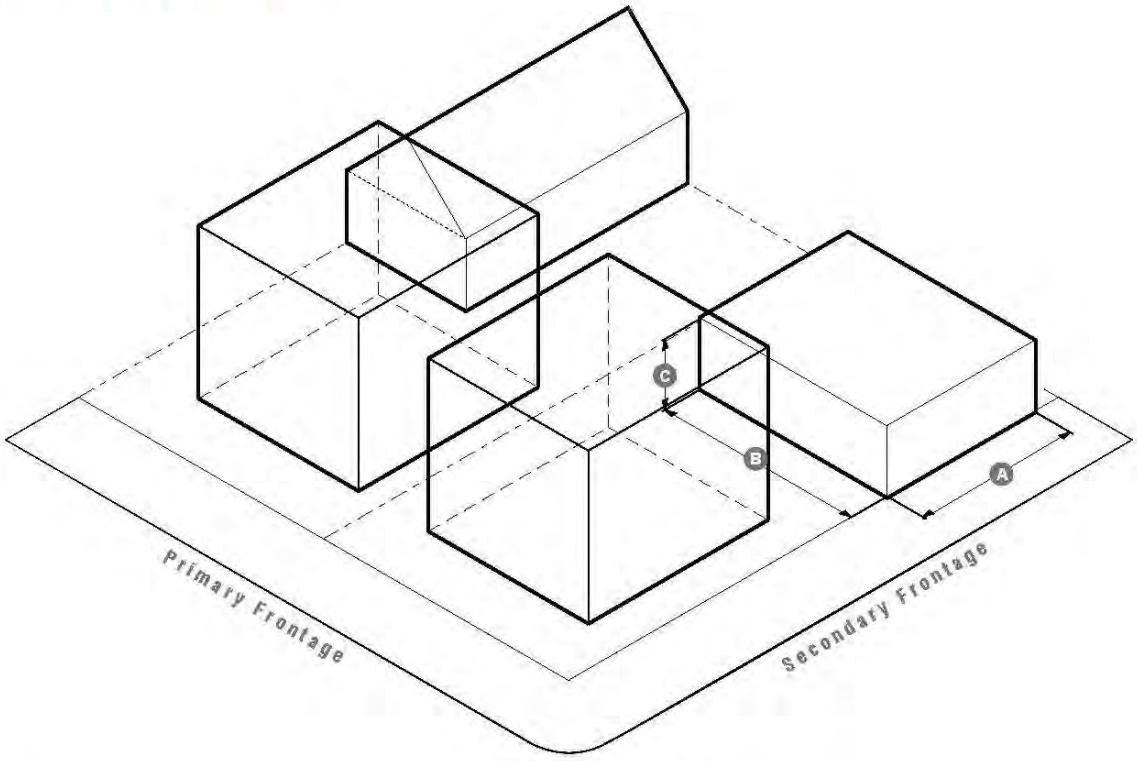

a. DESCRIPTION

An accessory building that provides space for fabrication uses.

b. ACCESSORY BUILDING PLACEMENT

Primary Front Setback	(1)
Secondary Front Setback	3 ft min
Side Setback	3 ft min
Rear Setback	3 ft min

c. BUILDING FORM

Building Width	30 ft max	A
Building Length	30 ft max	B
Total Stories	2 stories max	C
First Floor Height	9 ft min, 15 ft max	
Upper Floor Height	9 ft min, 12 ft max	
First Floor Elevation	0 ft min	
Roofs	see Section E Roof Types	
Attachments	1 max	

d. ALLOWABLE UNITS

1 unit max

e. FENESTRATION

First Floor Fenestration	20% min
Upper Floor Fenestration	20% min

f. STANDARDS

1. The fabrication shop must be setback at least 20 ft from the front facade of the primary building.

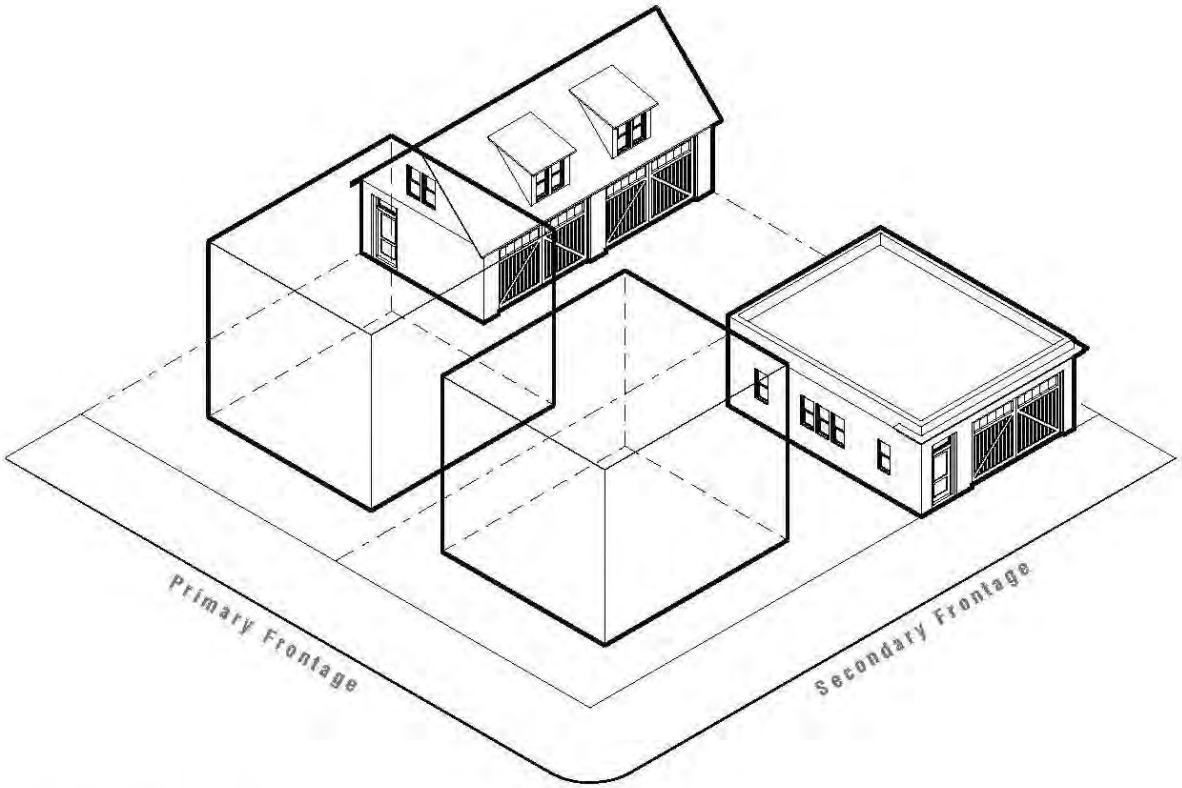

g. MASSING COMPONENTS

Porch	●
Gallery	●
Connector	●
Shed Dormer	●
Cross Gable	●
Porte-Cochere	●

h. ARCHITECTURAL COMPONENTS

Stoop	●
Canopy	●
Portico	●
Balcony	●
Bay Window	●
Dormer Window	●
Deck	●
Roof Deck	●
Cupola	●

i. ROOFS

Gable Roof	●

● Permitted

5. ACCESSORY SHOP

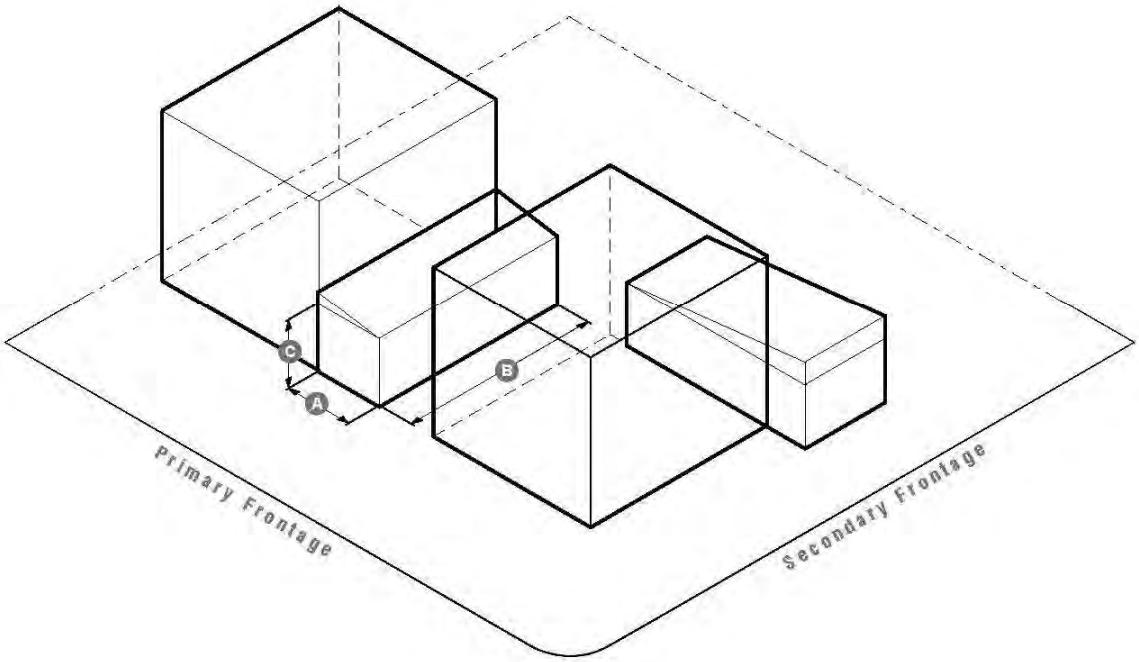

a. DESCRIPTION

An accessory building that provides space for commercial uses.

b. ACCESSORY BUILDING PLACEMENT

Primary Front Setback	0 ft min
Secondary Front Setback	0 ft min
Side Setback	0 ft min
Rear Setback	3 ft min

c. BUILDING FORM

Building Width	16 ft max	A
Building Length	36 ft max	B
Total Stories	1 story max	C
First Floor Height	10 ft min, 15 ft max	
Upper Floor Height	n/a	
First Floor Elevation	0 ft min	
Roofs	see Section E Roof Types	
Attachments	2 max	

d. ALLOWABLE UNITS

1 unit max

e. FENESTRATION

Shopfront	required
First Floor Fenestration	70% min
Upper Floor Fenestration	n/a

f. STANDARDS

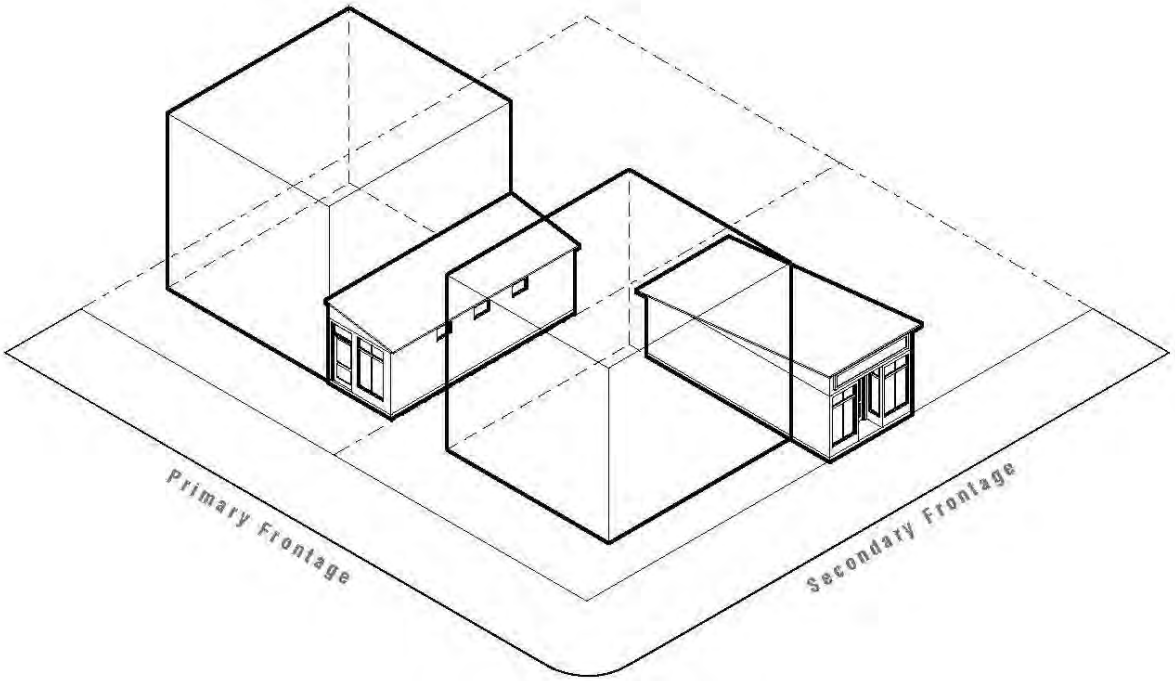

g. MASSING COMPONENTS	
Porch	●
Gallery	●
Connector	●
Shed Dormer	●
Cross Gable	●
Arcade	●
Porte-Cochere	●
Extended Shopfront	●

h. ARCHITECTURAL COMPONENTS	
Stoop	●
Canopy	●
Portico	●
Bay Window	●
Dormer Window	●
Deck	●
Roof Deck	●

i. ROOFS	
Gable Roof	●
Hipped Roof	●
Gambrel Roof	●
Shed Roof	●
Flat Roof	●

● Permitted

1. PORCH

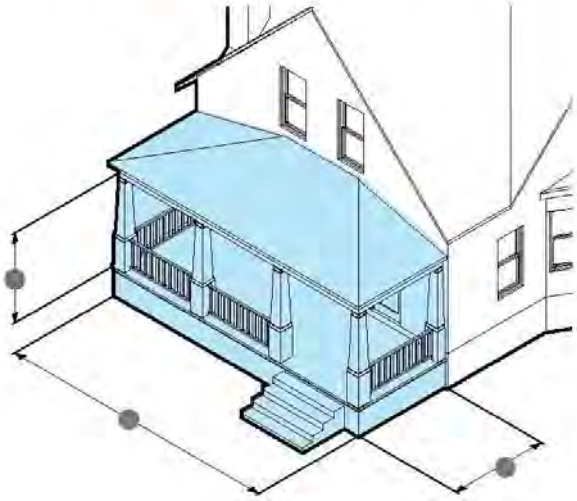

a. DESCRIPTION

A raised platform with stairs that provides access to a building entrance.

b. DIMENSIONS

Width	No more than the width of the adjoining building face	A
Projection	6 ft min, 12 ft max	B
Height	7 ft min	C
Fenestration	60% min when enclosed	

c. STANDARDS

1. Porches may be partially or fully enclosed.
2. Porches may be projecting, engaged, or integral.
3. Porches may wrap around corners to attach to porches, galleries, decks, or balconies on abutting building faces.
4. Stairs may extend off the front or side of the porch, except when a porch is located on an upper floor in which case the stairs cannot be located along the primary frontage.
5. When built on an upper floor, porches must be supported from below by a porch, arcade, or other supporting component; or visually supported by brackets, corbels, or beams along its full depth.
6. When built at the first floor, the space between piles or piers must be enclosed with latticework or similar material, or concealed visually by evergreen landscaping, on all sides.

2. GALLERY



a. DESCRIPTION

A raised, roofed platform that provides additional living space, with access solely from the interior of a building.

b. DIMENSIONS

Width	No more than the width of the building face to which it attaches	A
Projection	6 ft min, 12 ft max	B
Clear Height	7 ft min	C
Fenestration	60% min when enclosed	

c. STANDARDS

1. Galleries may be partially or fully enclosed.
2. Galleries may be projecting or integral.
3. Galleries may wrap around corners to attach to porches, decks, balconies, or other galleries on abutting building faces.
4. When built on an upper floor, galleries must be supported from below by a porch, arcade, or other supporting component; or visually supported by brackets, corbels, or beams along its full depth.
5. When built at the first floor, the platform must extend visually to the ground plane.

3. SIDE WING

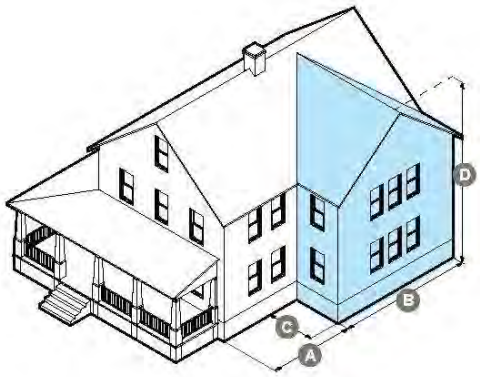

a. DESCRIPTION

A multi-story extension from the side walls of a primary building or accessory building.

b. DIMENSIONS

Setback from Facade	8 ft min	A
Width	max 2/3 width of primary building	B
Projection	max 2/3 depth of primary building	C
Absolute Height	Equal to or less than height of primary building	D
Fenestration	20% min	

c. STANDARDS

1. Side wings may not encroach on setbacks.
2. The primary building may only have one side wing per side.
3. Side wings may be centered or offset at the side wall of the primary building, provided they share at least 6 ft with the common wall.
4. A side wing may only attach to a primary or accessory building, though other components may attach to it.
5. The side wing may be used for vehicular parking, provided the garage doors are not within the frontage zone.

4. REAR ADDITION

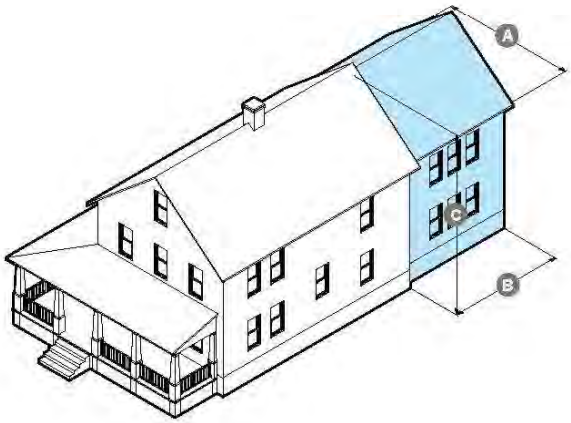

a. DESCRIPTION

An extension from the rear wall of a primary building or accessory building.

b. DIMENSIONS

Width	Max width of rear wall, less 2 ft	A
Projection	Less than or equal to the width of the main building mass	B
Height	Equal to or less than height of main building mass	C
Fenestration	20% min	

c. STANDARDS

1. Rear additions may not encroach on setbacks.
2. The primary building may only have one rear addition.
3. Rear additions may be centered or offset at the rear wall of the main building mass, provided they share at least 6 ft with the common wall.
4. The rear addition may be used for vehicular parking, provided the garage doors are not within the frontage zone.

5. STOOP

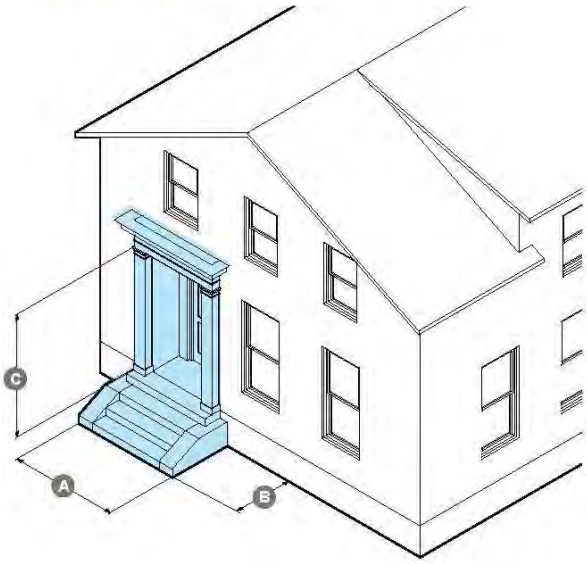

a. DESCRIPTION

A component type featuring a set of stairs with a landing leading to the entrance of a building.

b. DIMENSIONS

Width	3 ft 6 in min	A
Projection	3 ft 6 in min	B
Height	7 ft min when recessed	C

c. STANDARDS

1. Stoops may be recessed into the building facade.
2. Stoop may be built perpendicular or parallel to the building face, but must lead directly to ground level or an abutting sidewalk from the building entrance.
3. A Recessed stoop may not be enclosed.
4. Stoops, when built as part of a townhouse or live/work flex building, may be configured as a split stair to access a below grade unit.
5. If a stoop is built encroaching onto a public sidewalk, it must provide at least 3 ft clear and unobstructed space between its outermost face and the face of the curb.

6. CONNECTOR

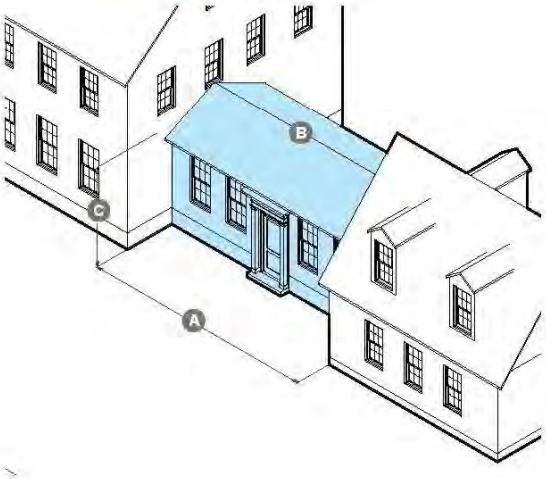

a. DESCRIPTION

A narrow, roofed extension meant to link a main building mass to an accessory building or to a component of an accessory building.

b. DIMENSIONS

Length	Equal to or less than the length of the primary building	A
Width	8 ft min, max 2 feet less than the narrowest building face or component face to which it attaches.	B
Absolute Height	May be one or more stories in height, but may not exceed the eave height of the smallest building element to which it is linked.	C
Fenestration	10% min	

c. STANDARDS

1. Must attach on at least one side to the primary building.
2. Connectors may not encroach on setbacks.

7. CROSS GABLE

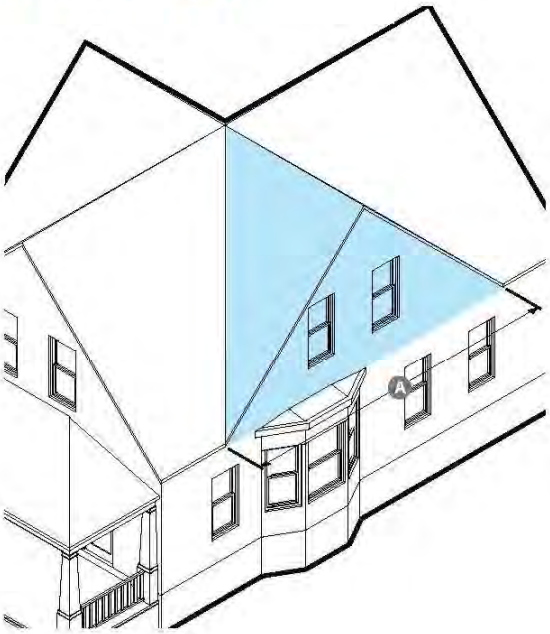

a. DESCRIPTION

A gable or gambrel roof that projects perpendicular from the roof of the primary building to increase the habitable space within a roof.

b. DIMENSIONS

Width	Equal to eave width of the narrowest face of the primary building.	A
Height	The ridge beam of the cross gable may not be higher than the ridge beam of the primary building.	B
Fenestration	20% min	

c. STANDARDS

1. Cross Gables may project outward from a building face (to a maximum of 12 ft) if supported from below by a component or visually supported by brackets, corbels, or a beam.
2. Two cross gables of equal size and roof pitch may be used together and may occupy the same space, but may not overlap.

8. SHED DORMER

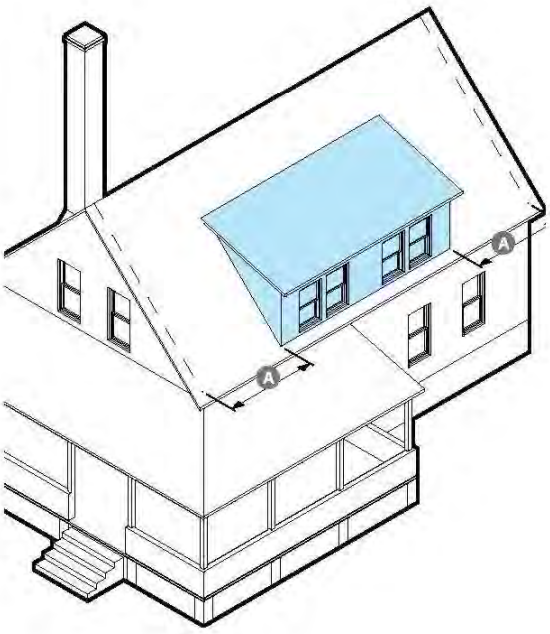

a. DESCRIPTION

A room, or portion of a room with a shed roof that projects vertically from the roof or building element, designed to provide increased light and expand the habitable space under a roof.

b. DIMENSIONS

Gable End Setback	1 ft min (3)	A
Fenestration	20% min	

c. STANDARDS

1. The face of the shed dormer must not project beyond the building eaves.
2. Gable end setbacks may be 0 ft from the building face when not visible from a thoroughfare (not including alleys).

9. DORMER WINDOW

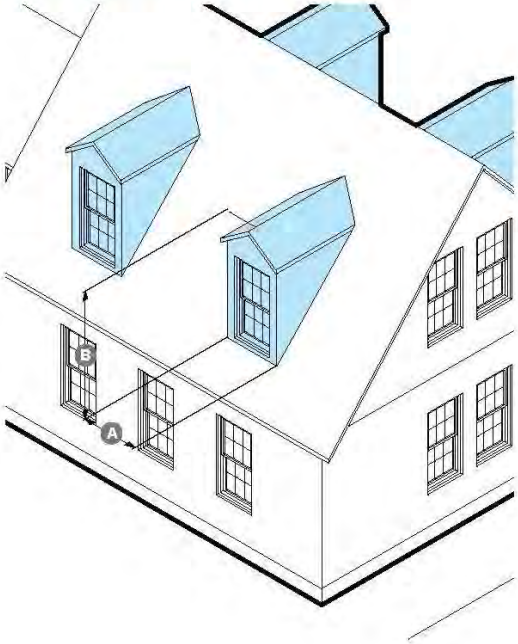

a. DESCRIPTION

A window or group of up to 3 windows with a gable, hip, or shed roof that projects vertically from the roof a building element, designed to provide increased light and expand the habitable space within a roof.

b. DIMENSIONS

Width	(2)	A
Height	(4)	B

c. STANDARDS

1. The window(s) in a dormer window should be vertically proportioned and no more than 3 ft wide.
2. The total width of a dormer window must be no more than 18 inches wider than the rough opening required for its' windows.
3. The face of the dormer window must not project beyond the building eaves.
4. When attached to a mansard or gambrel roof, the eave of the dormer may not pass above the chine of the roof.

10. BAY WINDOW

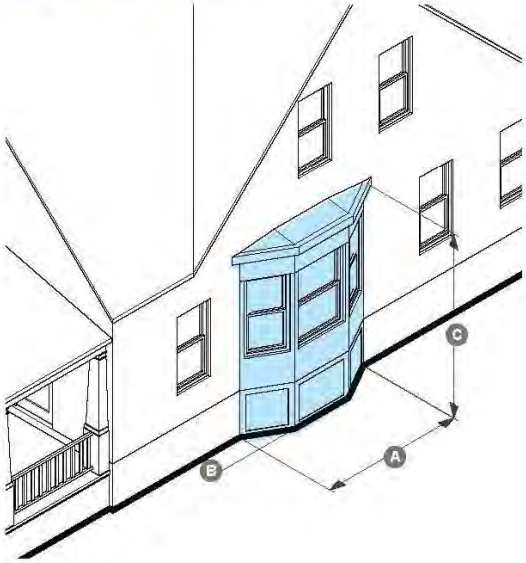

a. DESCRIPTION

A enclosed window assembly extending from the face of a building element to permit increased light, multi-directional views, and articulate a building facade.

b. DIMENSIONS

Width	16 ft max	A
Projection	6 in min, 4 ft max	B
Top Plate Height	Max equal to total number of full building stories.	C
Fenestration	30% min	

c. STANDARDS

1. Bay windows must be visually supported by brackets, corbels, or a beam along their full depth or, when built at the first floor, may extend visually to the ground plane.
2. Bay windows may only attach to the main building mass, additions, accessory buildings, towers, porte-cocheres, connectors, cross-gables, and extended shopfronts.
3. Bay windows may intersect with and occupy the same space as porches, balconies, galleries, arcades, and decks.
4. Bay windows must attach to a single building face and may not wrap around corners.
5. Bays windows may be two sided, multi-sided, or curved.
6. Bay windows may provide openings for doorways or windows.

11. BALCONY

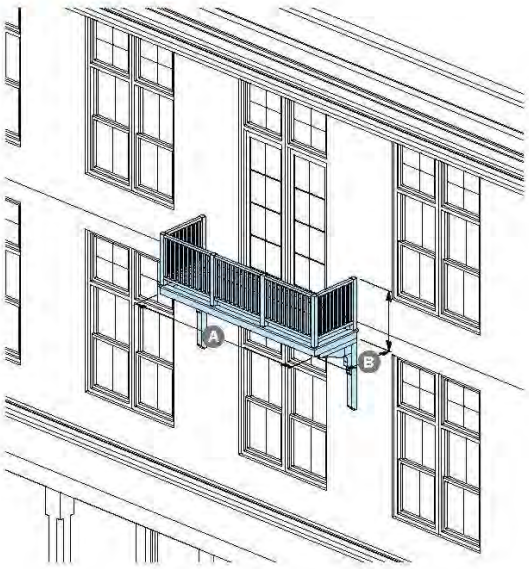

a. DESCRIPTION

An unroofed platform attached to a building face with a railing that provides outdoor space above the first floor.

b. DIMENSIONS

Width	No more than the width of the adjoining building face.	A
Projection	8 ft max	B

c. STANDARDS

1. Balconies are only permitted on upper stories.
2. Balconies may not be enclosed and must be unroofed unless it is recessed into the envelope of the building or component to which it is attached.
3. Balconies may be projecting, integral, terraced, or a combination thereof.
4. Balconies may wrap around corners to attach to galleries, porches, decks, or balconies on abutting building faces.
5. A balcony must be visually supported by brackets, corbels, or beams along its full width, or physically supported by another component.
6. A projecting balcony must have a clear height above the ground of at least 10 ft.
7. The railing of any balcony oriented toward a frontage must have posts and railings with spacing, except when recessed into the envelope of the building to which it is attached.
8. When built above a porch, gallery, portico, or arcade, the balcony may extend to the boundaries of the component below.

12. EXTENDED SHOPFRONT

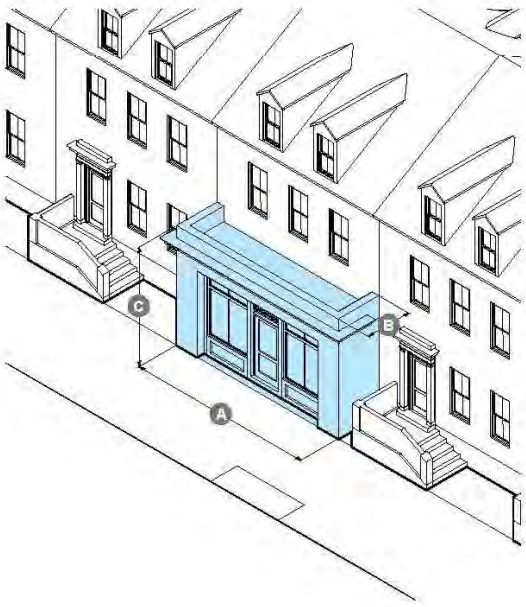

a. DESCRIPTION

An extension on the front of a building to provide new or expanded commercial space and a shopfront.

b. DIMENSIONS

Width	No more than the width of the building face to which it attaches.	A
Projection	0 ft min	B
Height	Max equal to total number of full building stories.	
Fenestration	70% min (Shopfront) 30% min (Upper Stories)	

c. STANDARDS

1. Extended shopfronts may wrap around corners to join with an accessory shop or another extended shopfront on another building face.
2. Extended shopfronts may not attach to accessory buildings with the exception of an accessory shop.
3. Only 1 extended shopfront is allowed per buiding face.

13. TURRET

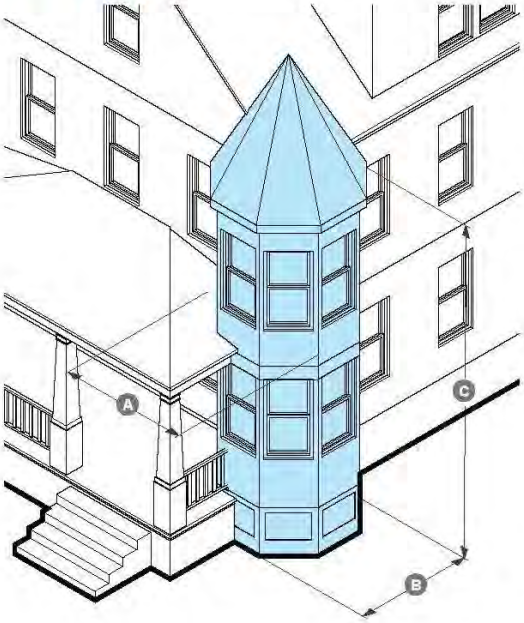

a. DESCRIPTION

A small, decorative, tower-like extension from the wall or corner of a building, meant to provide distinctive living space or to terminate an important axis.

b. DIMENSIONS

Length	8 ft max	A
Width	Must be equal to length	B
Height	The top plate of a turret may not exceed the height of the top plate of the adjoining building.	C
Fenestration	30% min	

c. STANDARDS

1. Turrets must be visually supported by brackets, corbels, or a beam along their full width, or physically supported by another component.
2. Turrets may be square, multi-sided, or curved, and must possess radial symmetry.
3. Turrets may wrap around corners.
4. Turrets may intersect with and occupy the same space as porches, balconies, galleries, arcades, and decks.
5. Turrets must extend beyond the building face(s) to which they are attached.
6. The highest point of the roof of a turret may be higher than the highest point of the roof of the primary building.

14. ARCADE

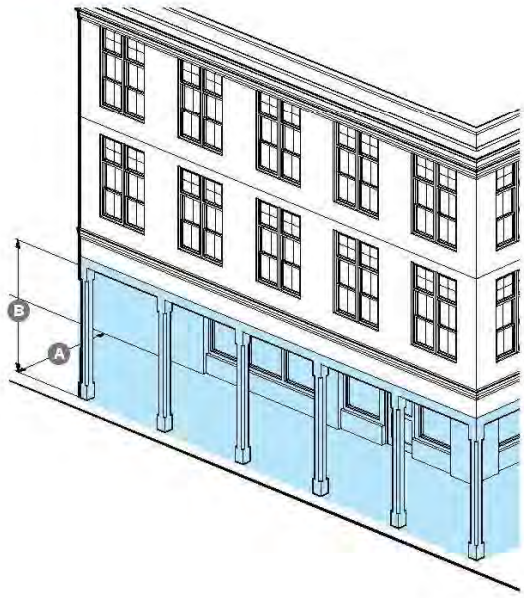

a. DESCRIPTION

A ground-level roofed structure that provides cover and is supported on regularly spaced pillars, columns, or archways.

b. DIMENSIONS

Width	n/a	
Projection	8 ft min and no more than the height of the first floor of the main building mass.	A
Height	8 ft min	B
Fenestration	70% min when enclosed	

c. STANDARDS

1. Arcades may be projecting or integral.
2. Arcades may be partially or fully enclosed with windows, doors, or decorative ironwork provided they maintain at least 90% transparent openings.
3. When projecting over a sidewalk must extend the full width, less 2 ft.
4. Arcades located along a primary or secondary frontage, or within the town right-of-way may not be enclosed.
5. Arcades may wrap around corners to attach to other arcades on abutting building faces.

15. PORTE-COCHERE

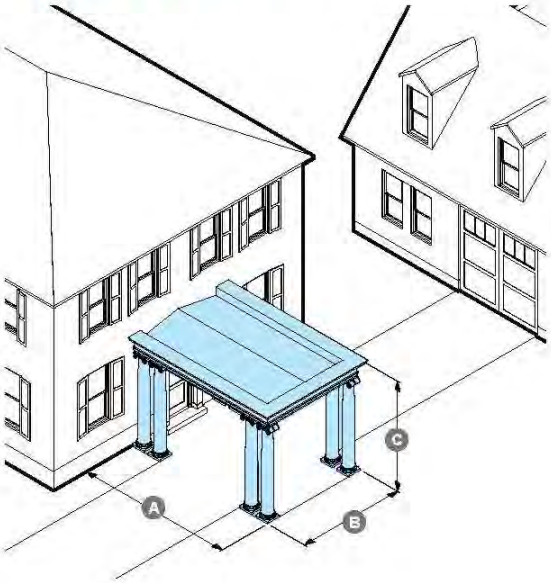

a. DESCRIPTION

A roofed, building element through which a vehicle may pass, and that provides shelter from inclement weather.

b. DIMENSIONS

Width	16 ft max (4)	A
Projection	9 ft min (4)	B
Height	1 Story (4)	C

c. STANDARDS

1. Porte-cocheres may link any two buildings or components.
2. Front and back faces of the porte-cochere must have openings of dimension sufficient to pass a vehicle through at the ground level.
3. Carriage House-style lifting doors are not permitted on a porte-cochere.
4. When associated with a commercial drive-through, the following standards apply, replacing any above standards as required:
   a. When located on the side of a building, a porte-cochere must be attached to the primary building, must be shorter than the eave of the building or no more than 16 ft in absolute height (whichever is lesser), and may not project more than 12 ft.
   b. When located on the side of a building, porte-cochere materials should match the materials used on the primary building.

16. PORTICO

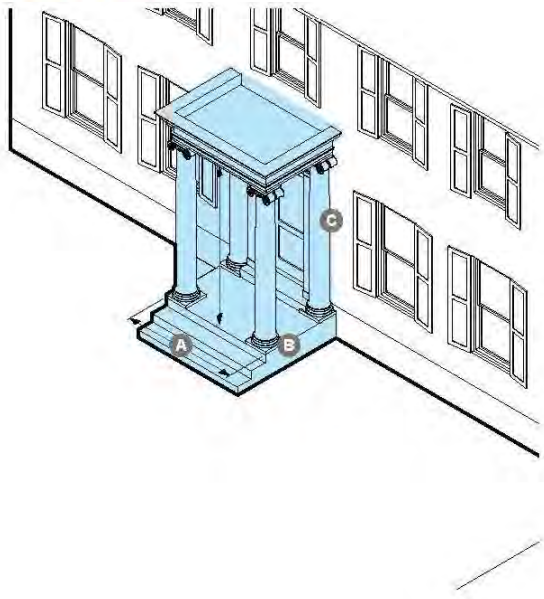

a. DESCRIPTION

A roofed structure above a stoop or platform supported on columns or pillars, which shields occupants from inclement whether and provides access to a building entrance.

b. DIMENSIONS

Width	3 ft 6 in min	A
Projection	3 ft 6 in min, 8 ft max	B
Height	8 ft min	C
Fenestration	n/a	

c. STANDARDS

1. No span between columns or pillars may be larger than the height of adjacent columns or pillars.
2. A portico may not exceed the height of the primary ridge beam on the building element to which it attaches.
3. A portico must be elevated on a platform at least 1 foot from the surface of the ground.

17. CANOPY



a. DESCRIPTION

A fixed, wall mounted overhang extending from a building to provide shade and weather protection for pedestrians.

b. DIMENSIONS

Width	4 ft min	A
Projection	3 ft min	B
Height	8 ft min	C

c. STANDARDS

1. Canopies should be visually supported on wood or metal brackets, or suspended by cable or chain.
2. Canopies should be inset from the corners of the wall to which they are attached by at least 3 inches.

18. DECK

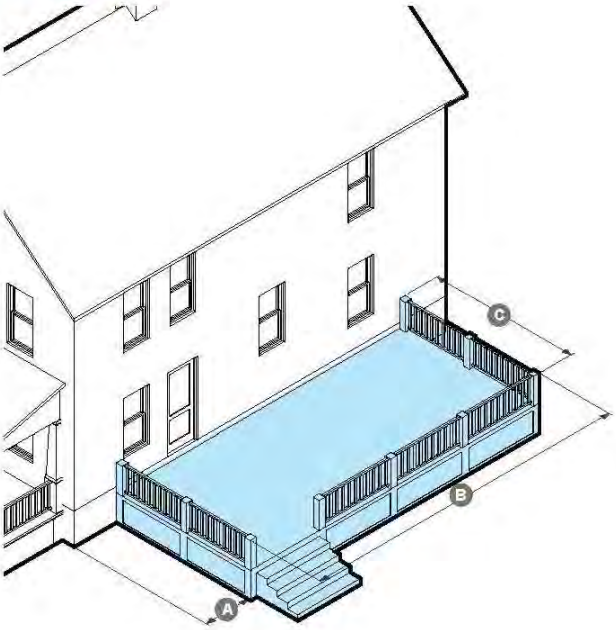

a. DESCRIPTION

A roofless, uncovered, raised platform accessible from a secondary entrance to a building that provides outdoor amenity space.

b. DIMENSIONS

Setback from Facade	2 ft min	A
Width	8 ft min	B
Projection	6 ft min	C
Height	none	
Fenestration	none	

c. STANDARDS

1. Decks are not permitted along frontages.
2. The space between piles or piers must be enclosed with latticework or similar material, or concealed visually by evergreen landscaping, on all sides, except for decks that are elevated more than 8 ft from the ground plane.
3. Decks may not be enclosed.

19. TOWER

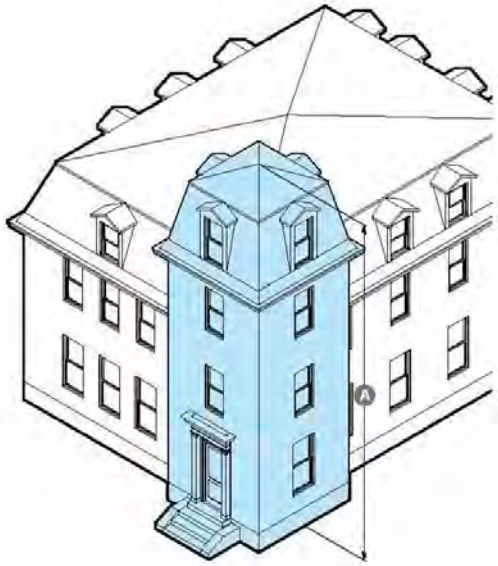

a. DESCRIPTION

A building component that is significantly taller than it is wide as way to gain views and additional habitable space.

b. DIMENSIONS

Area	200 sf max
Height	Maximum of one story above the highest story not contained within a roof. (A)
Fenestration	30% min (8)

c. STANDARDS

1. Towers must attach to the main building mass.
2. Towers must be constructed on a foundation that extends to the ground plane.
3. Towers may be square, multi-sided, or curved, but should posses radial symmetry.
4. Towers may intersect with and occupy the same space as porches, galleries, arcades, and decks.
5. Towers may extend horizontally beyond the building face(s) to which they are attached.
6. 1 tower per lot max.
7. The highest point of a tower may extend above the highest point of the roof of the primary building.
8. Towers built as silos on a barn may ignore widow and door requirements.

20. ROOF DECK

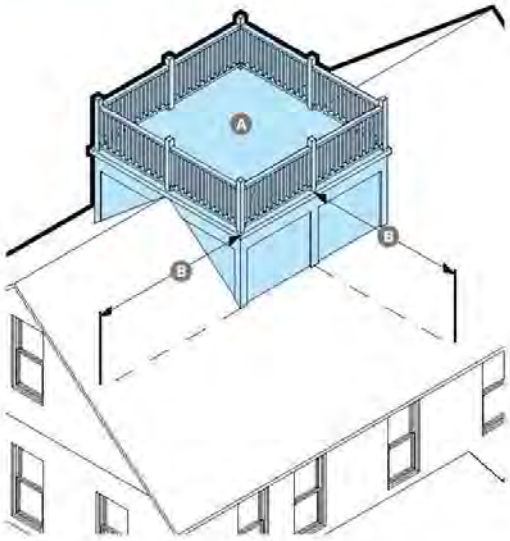

a. DESCRIPTION

A raised uncovered platform with a railing on the roof of a building that provides outdoor amenity space and access to views.

b. DIMENSIONS

Total Area	400 sq ft max	(A)
Setback from Building Faces	5 ft min from every building face (3)	(B)

c. STANDARDS

1. The width of roof decks may not exceed 50% of the building width, except on a flat roof they may extend to fill the entire roof.
2. The railing must be constructed with posts and rails with spacing such that it does not exceed 50% opacity, except when built on a flat roof.
3. Roof decks built on a flat roof may extend to the building parapet and use the parapet as a railing, provided it is of sufficient height.
4. Roof decks may only be built on the main roof of a primary, building accessory building, rear additions, side wings, connectors, galleries, and porches.
5. The highest point of a roof deck may be higher than the highest point of the roof of the primary building.

21. CUPOLA

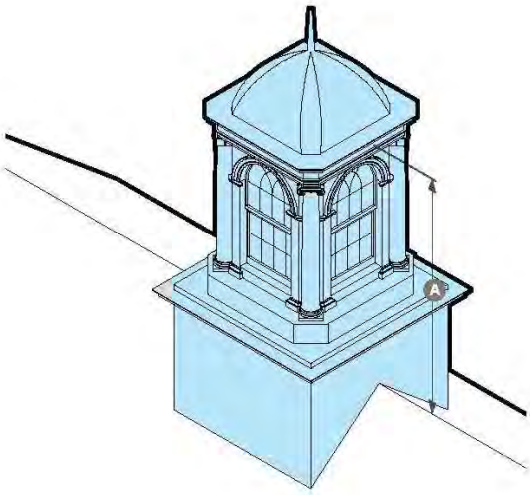

a. DESCRIPTION

A small roof structure, possessing radial symmetry, used to provide light and ventilation to a building, or as a belfry, overlook, lantern, or additional habitable space.

b. DIMENSIONS

Length		A
Width		B
Height	Less than or equal to the maximum upper floor height for the main building mass or accessory building to which it is attached, measured from the top of the primary ridge beam to the base of the cupola's eaves.	C
Fenestration	40% min	

c. STANDARDS

1. A cupola's maximum area must be no greater than 150 SF.
2. Cupolas may only attach to the main building mass, roof decks, towers, porte-cocheres, and accessory buildings.
3. The highest point of a cupola may be higher than the highest point of the roof of the primary building.

1. GABLE ROOF

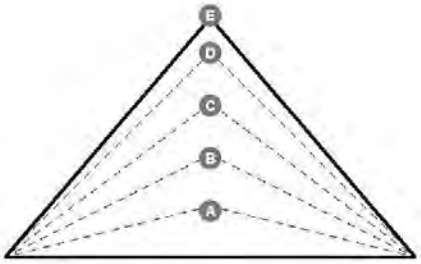

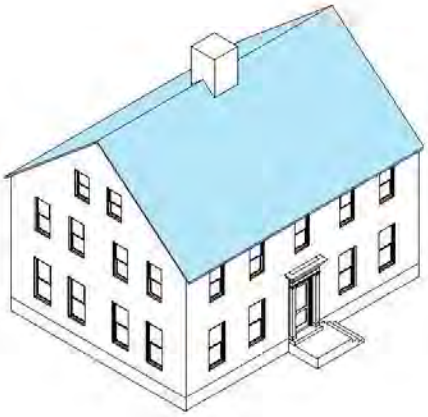

a. DESCRIPTION

A pitched roof with two sides of the same slope and length, meeting symmetrically at a single ridge beam.

b. ROOF PITCH BY BUILDING TYPE

Cottage	6:12 Min, 14:12 Max	B E
House	8:12 Min, 14:12 Max	C E
Bungalow	6:12 Min, 14:12 Max	B E
Duplex	8:12 Min, 14:12 Max	C E
Apartment House	9:12 Min, 14:12 Max	C E
Apartment Building	9:12 Min, 14:12 Max	C E
Townhouse	6:12 Min, 12:12 Max	B D
Shophouse	9:12 Min, 14:12 Max	C E
Live-work/ Flex	6:12 Min, 12:12 Max	B D
Shop	9:12 Min, 14:12 Max	C E
Inn Building	6:12 Min, 12:12 Max	B D
Mixed-use Building	6:12 Min, 12:12 Max	B D
Fabrication Building	6:12 Min, 12:12 Max	B D
Civic Building	6:12 Min, 12:12 Max	B D

c. ROOF PITCH BY ACCESSORY BUILDING TYPE

Barn	9:12 Min, 14:12 Max	C E
Farmstand	9:12 Min, 14:12 Max	C E
Carriage House	9:12 Min, 14:12 Max	C E
Fabrication Shop	9:12 Min, 14:12 Max	C E
Accessory Shop	9:12 Min, 14:12 Max	C E

d. ROOF PITCH BY COMPONENT TYPE

Porch	3:12 Min, 12:12 Max	A D
Gallery	3:12 Min, 12:12 Max	A D
Side Wing	9:12 Min, 14:12 Max	C E
Rear Addition	9:12 Min, 14:12 Max	C E
Stoop	-	
Connector	-	
Cross Gable	9:12 Min, 14:12 Max	C E
Shed Dormer	-	
Window Dormer	3:12 Min, 14:12 Max	A E
Bay Window	3:12 Min, 14:12 Max	A E
Balcony	-	
Extended Shopfront	-	C D
Turret	-	
Arcade	-	
Porte-Cochere	3:12 Min, 9:12 Max	A C
Portico	3:12 Min, 9:12 Max	A C

Article X, Section 10.4 **Building Standards** // Section E **Roof Types**

Deck	-	
Tower	-	
Roof Deck	-	
Cupola	-	
Canopy	3:12 Min, 9:12 Max	A C

e. **STANDARDS**

1. Civic buildings are exempt from roof system regulation. The values presented in this table are guidelines only.
2. Rear additions may not exceed the roof pitch of the primary building to which they attach.

2. HIPPED ROOF

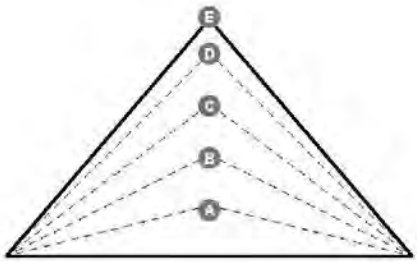

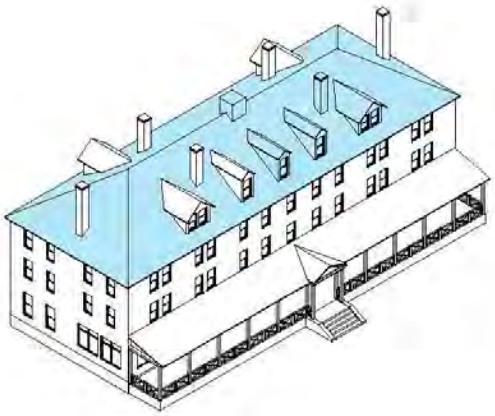

a. DESCRIPTION

A pitched roof with all sides inclined at the same slope, such that they meet symmetrically at a shared ridge beam or a point.

b. ROOF PITCH BY BUILDING TYPE

Cottage	6:12 Min, 12:12 Max	B D
House	6:12 Min, 12:12 Max	B D
Bungalow	-	
Duplex	6:12 Min, 12:12 Max	B D
Apartment House	6:12 Min, 12:12 Max	B D
Apartment Building	6:12 Min, 12:12 Max	B D
Townhouse	3:12 Min, 12:12 Max	A D
Shophouse	6:12 Min, 12:12 Max	B D
Live-work/ Flex	3:12 Min, 12:12 Max	A D
Shop	6:12 Min, 12:12 Max	B D
Inn Building	3:12 Min, 12:12 Max	A D
Mixed-use Building	3:12 Min, 12:12 Max	A D
Fabrication Building	3:12 Min, 12:12 Max	A D
Civic Building (1)	3:12 Min, 12:12 Max	A D

c. ROOF PITCH BY ACCESSORY BUILDING TYPE

Barn	-	
Farmstand	3:12 Min, 12:12 Max	A D
Carriage House	3:12 Min, 12:12 Max	A D
Fabrication Shop	3:12 Min, 12:12 Max	A D
Accessory Shop	3:12 Min, 12:12 Max	A D

d. ROOF PITCH BY COMPONENT TYPE

Porch	3:12 Min, 12:12 Max	A D
Gallery	3:12 Min, 12:12 Max	A D
Side Wing	3:12 Min, 12:12 Max	A D
Rear Addition	3:12 Min, 12:12 Max	A D
Stoop	-	
Connector	3:12 Min, 12:12 Max	A D
Cross Gable	-	
Shed Dormer	-	
Window Dormer	3:12 Min, 12:12 Max	A D
Bay Window	3:12 Min, 12:12 Max	A D
Balcony	-	
Extended Shopfront	-	A D
Turret	3:12 Min, 14:12 Max	A E
Arcade	3:12 Min, 12:12 Max	A D
Porte-Cochere	3:12 Min, 12:12 Max	A D
Portico	3:12 Min, 9:12 Max	A C
Deck	-	

Tower	3:12 Min, 12:12 Max	A D
Roof Deck	-	
Cupola	3:12 Min, 12:12 Max	A D
Canopy	3:12 Min, 12:12 Max	A D

e. **STANDARDS**

1. Civic buildings are exempt from roof system regulation. The values presented in this table are guidelines only.
2. Rear additions may not exceed the roof pitch of the primary building to which they attach.

3. MANSARD ROOF

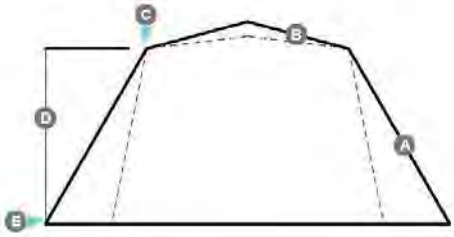



a. DESCRIPTION

A complex roof type consisting of a shallow sloped upper portion, and a steeper sloped lower portion.

b. ROOF PITCH BY BUILDING TYPE

Cottage	lower slope: 9:12 min, 60:12 max upper slope: 1.5:12 min, 3:12 max	A B
House	lower slope: 9:12 min, 60:12 max upper slope: 1.5:12 min, 3:12 max	A B
Bungalow	-	
Duplex	lower slope: 9:12 min, 60:12 max upper slope: 1.5:12 min, 3:12 max	A B
Apartment House	lower slope: 9:12 min, 60:12 max upper slope: 1.5:12 min, 3:12 max	A B
Apartment Building	lower slope: 9:12 min, 60:12 max upper slope: 1.5:12 min, 3:12 max	A B
Townhouse	-	
Shophouse	lower slope: 9:12 min, 60:12 max upper slope: 1.5:12 min, 3:12 max	A B
Live-work/ Flex	-	
Shop	-	
Inn Building	lower slope: 9:12 min, 60:12 max upper slope: 1.5:12 min, 3:12 max	A B
Mixed-use Building	lower slope: 9:12 min, 60:12 max upper slope: 1.5:12 min, 3:12 max	A B
Fabrication Building	-	
Civic Building (1)	lower slope: 9:12 min, 60:12 max upper slope: 1.5:12 min, 3:12 max	A B

c. ROOF PITCH BY ACCESSORY BUILDING TYPE

Barn	-	
Farmstand	-	
Carriage House	lower slope: 9:12 min, 60:12 max upper slope: 1.5:12 min, 3:12 max	A B
Fabrication Shop	-	
Accessory Shop	-	

d. ROOF PITCH BY COMPONENT TYPE

Porch	-	
Gallery	-	
Side Wing	lower slope: 9:12 min, 60:12 max upper slope: 1.5:12 min, 3:12 max	A B
Rear Addition	lower slope: 9:12 min, 60:12 max upper slope: 1.5:12 min, 3:12 max	A B
Stoop	-	
Hyphen	-	
Cross Gable	-	
Shed Dormer	-	
Window Dormer	-	

Bay Window	-
Balcony	-
Extended Shopfront	-
Turret	lower slope: 9:12 min, 60:12 max (A) upper slope: 1.5:12 min, 3:12 max (B)
Arcade	-
Porte-Cochere	-
Portico	-
Deck	-
Tower	lower slope: 9:12 min, 60:12 max (A) upper slope: 1.5:12 min, 3:12 max (B)
Roof Deck	-
Cupola	lower slope: 9:12 min, 60:12 max (A) upper slope: 1.5:12 min, 3:12 max (B)
Canopy	-

e. STANDARDS

1. Civic buildings are exempt from roof system regulation. The values presented in this table are guidelines only.
2. Rear additions may not exceed the roof pitch of the primary building to which they attach.
3. Mansard roofs must always set the chine (C) to be at least 8 ft but no more than 12 ft (D) higher than the eaves (E).

4. GAMBREL ROOF

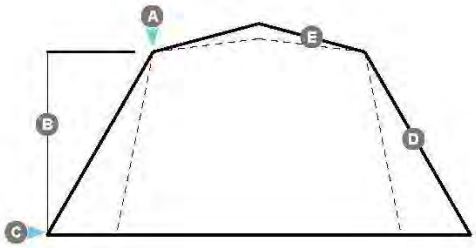

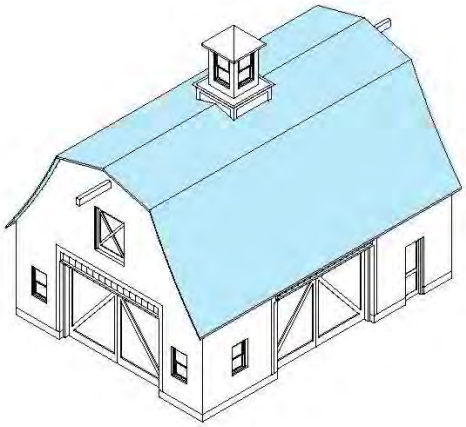

a. DESCRIPTION

A complex pitched roof with two sides, each of which has a shallower slope above the steeper one.

b. ROOF PITCH BY BUILDING TYPE

Cottage	-	
House	lower slope: 9:12 min, 60:12 max upper slope: 1.5:12 min, 3:12 max	D E
Bungalow	lower slope: 9:12 min, 60:12 max upper slope: 1.5:12 min, 3:12 max	D E
Duplex	lower slope: 9:12 min, 60:12 max upper slope: 1.5:12 min, 3:12 max	D E
Apartment House	lower slope: 9:12 min, 60:12 max upper slope: 1.5:12 min, 3:12 max	D E
Apartment Building	lower slope: 9:12 min, 60:12 max upper slope: 1.5:12 min, 3:12 max	D E
Townhouse	-	
Shophouse	lower slope: 9:12 min, 60:12 max upper slope: 1.5:12 min, 3:12 max	D E
Live-work/ Flex	-	
Shop	lower slope: 9:12 min, 60:12 max upper slope: 1.5:12 min, 3:12 max	D E
Inn Building	lower slope: 9:12 min, 60:12 max upper slope: 1.5:12 min, 3:12 max	D E
Mixed-use Building	lower slope: 9:12 min, 60:12 max upper slope: 1.5:12 min, 3:12 max	D E
Fabrication Building	lower slope: 9:12 min, 60:12 max upper slope: 1.5:12 min, 3:12 max	D E
Civic Building (1)	lower slope: 9:12 min, 60:12 max upper slope: 1.5:12 min, 3:12 max	D E

c. ROOF PITCH BY ACCESSORY BUILDING TYPE

Barn	lower slope: 9:12 min, 60:12 max upper slope: 1.5:12 min, 3:12 max	D E
Farmstand	lower slope: 9:12 min, 60:12 max upper slope: 1.5:12 min, 3:12 max	D E
Carriage House	lower slope: 9:12 min, 60:12 max upper slope: 1.5:12 min, 3:12 max	D E
Fabrication Shop	lower slope: 9:12 min, 60:12 max upper slope: 1.5:12 min, 3:12 max	D E
Accessory Shop	lower slope: 9:12 min, 60:12 max upper slope: 1.5:12 min, 3:12 max	D E

d. ROOF PITCH BY COMPONENT TYPE

Porch	-	
Gallery	-	
Side Wing	lower slope: 9:12 min, 60:12 max upper slope: 1.5:12 min, 3:12 max	D E

Rear Addition	lower slope: 9:12 min, 60:12 max (D) upper slope: 1.5:12 min, 3:12 max (E)
Stoop	–
Hyphen	lower slope: 9:12 min, 60:12 max (D) upper slope: 1.5:12 min, 3:12 max (E)
Cross Gable	lower slope: 9:12 min, 60:12 max (D) upper slope: 1.5:12 min, 3:12 max (E)
Shed Dormer	–
Window Dormer	–
Bay Window	–
Balcony	–
Extended Shopfront	–
Turret	–
Arcade	–
Porte-Cochere	lower slope: 9:12 min, 60:12 max (D) upper slope: 1.5:12 min, 3:12 max (E)
Portico	–
Deck	–
Tower	–
Roof Deck	–
Cupola	–
Canopy	–

e. STANDARDS

1. Civic building are exempt from roof system regulation. The values presented in this table are guidelines only.
2. Rear additions may not exceed the roof pitch of the primary building to which they attach.
3. Gambrel roofs must always set the chine (A) to be at least 8 ft but no more than 12 ft (B) higher than the eaves (C).

5. SHED ROOF

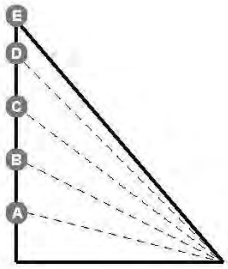



a. DESCRIPTION

A simple roof pitched in only one direction.

b. ROOF PITCH BY BUILDING TYPE

Cottage	-	
House	-	
Bungalow	-	
Duplex	-	
Apartment House	-	
Apartment Building	-	
Townhouse	3:12 Min, 6:12 Max	A B
Shophouse	-	
Live-work/ Flex	3:12 Min, 6:12 Max	A B
Shop	3:12 Min, 6:12 Max	A B
Inn Building	-	
Mixed-use Building	3:12 Min, 6:12 Max	A B
Fabrication Building	3:12 Min, 6:12 Max	A B
Civic Building (1)	3:12 Min, 6:12 Max	A B

c. ROOF PITCH BY ACCESSORY BUILDING TYPE

Barn	-	
Farmstand	3:12 Min, 6:12 Max	A B
Carriage House	-	
Fabrication Shop	3:12 Min, 6:12 Max	A B
Accessory Shop	3:12 Min, 6:12 Max	A B

d. ROOF PITCH BY COMPONENT TYPE

Porch	3:12 Min, 6:12 Max	A B
Gallery	3:12 Min, 6:12 Max	A B
Side Wing	3:12 Min, 6:12 Max	A B
Rear Addition	3:12 Min, 6:12 Max	A B
Stoop	3:12 Min, 6:12 Max	A B
Hyphen	3:12 Min, 6:12 Max	A B
Cross Gable	-	
Shed Dormer	3:12 Min, 6:12 Max	A B
Window Dormer	3:12 Min, 6:12 Max	A B
Bay Window	3:12 Min, 6:12 Max	A B
Balcony	-	
Extended Shopfront	3:12 Min, 6:12 Max	A B
Turret	-	
Arcade	3:12 Min, 6:12 Max	A B
Porte-Cochere	3:12 Min, 6:12 Max	A B
Portico	3:12 Min, 6:12 Max	A B

Deck	-	
Tower	-	
Roof Deck	-	
Cupola	-	
Canopy	3:12 Min, 6:12 Max	A B

e. **STANDARDS**

1. Civic buildings are exempt from roof system regulation. The values presented in this table are guidelines only.
2. Rear additions may not exceed the roof pitch of the primary building to which they attach.
3. When used on a component that is attaching to a building, shed roofs must always orient the ridge beam to the wall or roof it is attaching to.

6. FLAT ROOF



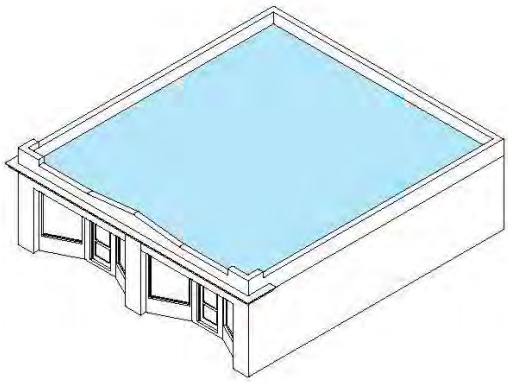

a. DESCRIPTION

A simple roof pitched very slightly in one ore more directions, approximating a flat surface.

b. ROOF PITCH BY BUILDING TYPE

Cottage	-	
House	-	
Bungalow	-	
Duplex	-	
Apartment House	-	
Apartment Building	-	
Townhouse	1.5:12 min, 3:12 max	A B
Shophouse	-	
Live-work/ Flex	1.5:12 min, 3:12 max	A B
Shop	1.5:12 min, 3:12 max	A B
Inn Building	1.5:12 min, 3:12 max	A B
Mixed-use Building	1.5:12 min, 3:12 max	A B
Fabrication Building	1.5:12 min, 3:12 max	A B
Civic Building (1)	1.5:12 min, 3:12 max	A B

c. ROOF PITCH BY ACCESSORY BUILDING TYPE

Barn	-	
Farmstand	1.5:12 min, 3:12 max	A B
Carriage House	-	
Fabrication Shop	1.5:12 min, 3:12 max	A B
Accessory Shop	1.5:12 min, 3:12 max	A B

d. ROOF PITCH BY COMPONENT TYPE

Porch	1.5:12 min, 3:12 max	A B
Gallery	1.5:12 min, 3:12 max	A B
Side Wing	1.5:12 min, 3:12 max	A B
Rear Addition	1.5:12 min, 3:12 max	A B
Stoop	-	
Connector	1.5:12 min, 3:12 max	A B
Cross Gable	-	
Shed Dormer	-	
Window Dormer	-	
Bay Window	1.5:12 min, 3:12 max	A B
Balcony	-	
Extended Shopfront	1.5:12 min, 3:12 max	A B
Turret	1.5:12 min, 3:12 max	A B
Arcade	1.5:12 min, 3:12 max	A B
Porte-Cochere	1.5:12 min, 3:12 max	A B
Portico	1.5:12 min, 3:12 max	A B

Article X, Section 10.4 **Building Standards** // Section E **Roof Types**

Deck	-	
Tower	1.5:12 min, 3:12 max	A B
Roof Deck	-	
Cupola	1.5:12 min, 3:12 max	A B
Canopy	1.5:12 min, 3:12 max	A B

e. STANDARDS

1. Civic buildings are exempt from roof system regulation. The values presented in this table are guidelines only.
2. Rear additions may not exceed the roof pitch of the primary building to which they attach.
3. All slopes for flat roofs should defer to local building code regarding minimum slopes for a specified roofing system.

Absolute Height:
Height as measured from the surface of the ground to the highest point on a building.

Accessory Building:
See Building, Accessory.

Accessory Unit:
An additional permitted residential or commercial unit located in a component of a primary building or in an accessory building.

Alley:
A thoroughfare typically located internal to a block that provides access to the side or rear of lots and onto which no lot directly fronts. Alleys typically provide access to service areas, parking, and accessory buildings and may contain utility easements.

Attached:
An object may be said to be attached to another when their outer surfaces are permanently in direct contact, or when they share part of their structural system.

Attic:
The non-habitable interior space located directly under a pitched roof of a building.

Average Ground Level:
The mean (average) ground level at the corners of the main body of a building type.

Awning:
A wall mounted, pitched, fabric covering extending from a building to provide shade and weather protection for pedestrians.

Bay:
An area of a facade between two buttresses, pilasters, columns, piers, or other equivalent architectural features.

Bracket:
A visual and/or structural support, typically made of metal or wood, projecting from a building face to bear the weight or visually support a building element.

Building, Accessory:
A second, and typically smaller building, typically located on a lot with a primary building, often times toward the rear of the lot, and sometimes connected to the primary building.

Building, Primary:
A permitted building capable of occupying a lot as the sole structure, as distinct from accessory buildings and additional structures which are dependent on a primary building.

Building Element:
Any part of a building, including the main building mass, components, and accessory buildings.

Building Face:
Any exterior wall of a Building.

Building Height:
The measurement of building height by stories, where each full story above average ground level is counted as 1 story. For buildings with a pitched roofs, habitable space is allowed within the pitch and is not considered a full story.

Building Mass:
See Main Building Mass.

Building Type:
A classification or kind of structure characterized and differentiated by its massing, composition, use, features, and placement on a lot.

Carriage House:
An enclosed area integral to a primary building or accessory building that provides space for parking or storage of vehicles. Not synonymous with the parking garage building type.

Carriage House Doors:
Lifting, sliding, or swinging doors that open into an interior space used for vehicular parking, storage, retail sales, fabrication, or other uses.

Civic Space:
An outdoor open space designed to support social and recreational activities.

Clearance:
The height above the sidewalk or other surface, to the bottom edge of an object or building component.

Clear Height:
The vertical distance between the underside of an overhanging building element and the horizontal surface below, free from obstruction.

Component:
One of the elements that make up a building, the other being the main building mass. Components are comprised of smaller attachments to the main building mass and provide architectural articulation and additional usable space.

Corbel:
Any bracket, especially one of brick or stone, that typically protrudes only slightly from the face of a building.

Detached:
A dwelling that is physically separated from any other structure or structures except accessory buildings.

Eave:
The soffit resulting from the junction of a building wall and an overhanging roof.

Elevation:
The vertical distance between the average ground plane and the top of the finished first floor of a building.

Enclose(d):
To fill in the spaces between structural supports with latticework, walls, windows, or other non-structural wall covering to increase the usability of an outdoor space.

First Floor Elevation:
The height from the average ground level to the surface of the first full floor, measured at the primary front facade of the building.

Fully Enclose(d):
To fill the space between structural supports with walls or windows.

Element:
See Building Element.

Encroach:
To break the plane of a vertical or horizontal regulatory limit with a structural element, so that it extends into a Setback, above a height limit, or over the sidewalk of a public right-of-way.

Encroachment:
Any structural element that breaks the plane of a vertical or horizontal regulatory limit, extending into a setback, above a height limit, or the breaking of such limit by a structural element.

Façade:
The exterior wall of a building oriented in whole or in part toward a thoroughfare, civic space, or on-site civic space (not including alleys).

Face:
The surface of a structure or element, especially one that is presented to the view.

Fenestration:
The arrangement, proportioning, and design of openings on every exterior wall of a building, including windows and doors but excluding entrances and doors for parking, loading, and service facilities. If a Carriage House door is more than 50% glass, it is counted as a window and door. (see Diagram 1 Fenestration)

Fenestration, Ground Story
The percentage of openings present on a building's ground floor. (see Diagram 1 Fenestration)

Fenestration, Upper Story
The percentage of openings on the upper stories, each considered independently. (see Diagram 1 Fenestration)

DIAGRAM 1 - FENESTRATION

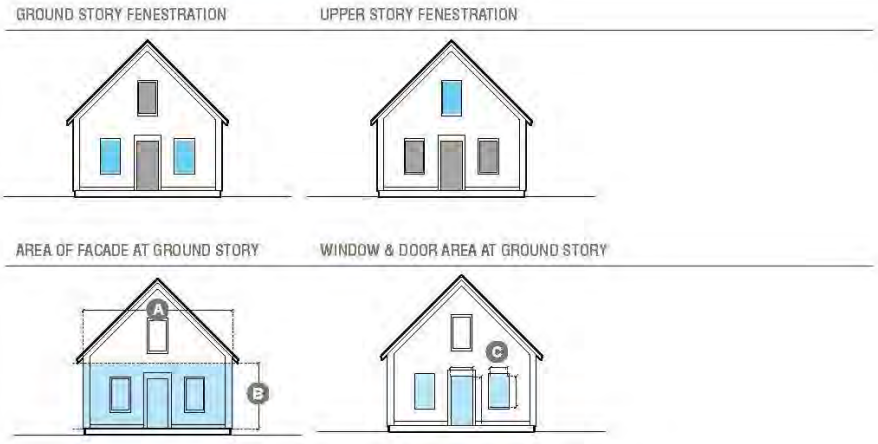

1. The area of a facade is determined by multiplying the facade's width and height.
2. The width of a facade (A) is taken to be the outer distance from corner to corner across the buildings face.
3. The height of a facade (B) for a particular story is measured from the surface of the floor, to the surface of the next floor above; or, if there is no floor above, to either the top of the wall plate, or the base of the buildings eaves, whichever is shorter.
4. The area occupied by fenestration (C), or windows and doors, must be measured as the area within the jambs of the window or door being measured, not including casing, molding, or the jambs themselves; and including all moving parts of the window or door, (sashes) and all parts of a fixed window joining the glass to the casing (stiles).

First Floor:
The lowest floor of a building that is not considered a basement.

First Floor Elevation
The height from the average ground level to the surface of the first full floor, measured at the primary front facade of the building.

Flat Roof:
see Roof, Flat.

Floor Area, Gross:
The sum area of all floors or accessible levels of a building as measured to the perimeter of the exterior faces of the walls with no deduction for corridors, stairs, closets, thickness of walls, columns or other features.

Floor Plate:
The total gross floor area of a single story of a building, excluding all unenclosed components of a building.

Forecourt:
A landscaped, semi-public area, open to the sky, formed by a recess in a portion of a building facade.

Front (noun):
A condition in which a building is required to be parallel or perpendicular with a frontage line.

Front (verb):
A condition in which a building is required to be parallel or perpendicular with a frontage line.

Front Setback:
The distance from the front lot line to the point where any structure may be constructed.

Frontage:
The land that lies adjacent to a thoroughfare, right-of-way, easement, civic space, or waterbody, or the space between a building. Building facades that face onto primary and secondary frontages define the public realm and are therefore more regulated than the buildings oriented toward side and rear lot lines.

Frontage Line:
A lot line bordering a thoroughfare, right-of-way, easement, civic space, or waterbody.

Frontage, Primary:
The primary frontage is the frontage that abuts the primary thoroughfare or, if there is no thoroughfare, it is the frontage that abuts a civic space, right-of-way, or easement.

Frontage, Secondary:
On corner lots, the frontage that is oriented toward the thoroughfare that is not the primary thoroughfare.

Front Setback, Primary:
The setback required along a primary frontage.

Front Setback, Secondary:
The setback required along a secondary frontage.

Frontage Zone:
The area between the front lot line of a property and the first 20 ft of a primary building. The frontage zone applies along both the primary and secondary frontages, and does not apply to alleys. In the case that a lot is undeveloped, the frontage zone is the area between the front lot line of a property and 30 ft into the site.

Grade:
The natural finished ground level of land ground level, or the elevation, at any given point.

Ground Plane:
The surface of the ground.

Height:
The distance between two points along a vertical plane.

Informal Building:
Informal buildings are light-impact, temporary, or small buildings, that are typically not connected to utilities and oftentimes don't have a permanent foundation.

Intersect:
A condition where one element touches and/or overlaps with another element.

Integral:
A condition that refers to one element being located within another.

Integrated:
See Integral.

Length:
In a three-dimensional measurement system, length is a horizontal measurement, distinct and longer than width.

Liner Building:
A standalone building or a portion of a building located along a frontage that is meant to shield a storage, parking, or utility area from view and create an active, habitable space to make a street or public space feel more safe and inviting.

Lot, Theoretical:
A potential lot created by theoretical lot lines demarcated on a plan to show and determine conformance with this Ordinance, without the act of legal subdivision. Syn: Theoretical Lot Lines.

Lot Line, Theoretical:
Lot lines demarcated on a plan to show and determine conformance with this Ordinance. Theoretical lot lines do not require an act of legal subdivision.

Main Building Mass:
The volume of a primary or accessory building as defined by the dimensional standards for building type and onto which components and roofs may attach.

Patio:
A hard-surfaced, landscaped space constructed at ground level, usually directly adjacent to a building. A patio is constructed with a finished walking surface laid or poured directly on finished grade. A patio has no permanent roof coverings.

Permitting Authority:
A person or board granted the authority to conduct project review and approval, in accordance with this Ordinance.

Pier:
A solid support designed to sustain vertical pressure, such as used in a section of a wall between windows or other adjacent openings or as structural member used in the construction of building foundations.

Platform:
An elevated flat structure meant to support the weight of people at or above the plane of the ground.

Primary Entrance:
The main point of access for pedestrians into a building, upper story use, or first floor tenant space.

Primary Ridge Beam:
The highest framing member of a pitched roof to which all rafters attach.

Project(ed):
When a building element extends perpendicular and away from the building face to which it is attached.

Rafter:
One of several internal beams extending from the eaves to the peak of the roof and constituting its frame.

Roof Line:
The highest point on any building or structure where an exterior wall or parapet wall encloses roof or floor area, including floor area provided for housing mechanical equipment.

Setback:
The horizontal distance required between the closest exterior wall of a building or parking and a specified element, such as a lot line, easement, or waterbody, measured perpendicularly. This area must be maintained clear of permanent structures with the exception of allowed encroachments.

Shopfront:
A first floor building facade, where substantial glazing is required, and the building entrance is located at the grade of the sidewalk or adjacent walkway.

Soffit:
The flat underside of an overhanging building element such as eaves or cornices.

Stallriser:
A section of wall below a storefront display window.

Story:
An occupiable floor of a building as distinct from the area contained under the pitch of a roof or a basement.

Streetwall:
A condition where buildings, through their consistent arrangement along a street, create the impression of forming a wall. While the buildings can be separated, a streetwall is predicated on the buildings all having a similar front setback that is in close proximity to the street or civic space.

Streetwall, Continuous:
A streetwall condition comprised by buildings that are predominantly attached on the sides and that all have a consistent front setback directly on the property line.

Terraced:
An area of sloped land that has been made into a series of level areas, resembling steps.

Top Plate:
The topmost horizontal, load-bearing member in a framed wall system.

Unit:
A single, internally connected space that comprises a building or a part of a building that can be occupied by any one of the use categories included in this Ordinance.

Vertical Plane:
A flat surface perpendicular to the ground or horizontal plane.

SECTION 10.5 COMMUNITY FACILITIES IMPACT ANALYSIS AND MITIGATION

After reviewing the complete application and receiving comments as deemed appropriate by the Planning Board, the Board may require the applicant to conduct an analysis of the impact of the proposed development upon the environment, public or municipal facilities and services including, but not limited to, schools, sewer, water, streets, solid waste and drainage, or mitigating any negative impact on the said environment, public or municipal facilities or services, or decline in the level of such services resulting from the proposed development. Once completed, the analysis shall be submitted to the Planning Board and any other appropriate public agency, board or department for review and comment. When it is demonstrated that the proposed development will result in a negative impact to the environment or to the community facilities or services, the Planning Board may require the applicant to make appropriate improvement to the environment or to the community facilities or services, or to provide for acceptable improvements as a condition of plan approval. Should the application or plans for the proposed development necessitate retaining the services of outside professional expertise by the Planning Board to review same, the costs shall be borne by the applicant.

SECTION 10.6 DRIVE THROUGH FACILITES [AMENDED 6/19/21]

Any use that provides drive-through service must be located and designed to minimize the impact on neighboring properties and traffic circulation. No drive- through facility shall be located in the area of the site adjacent to a residential use. Communication systems must not be audible on adjacent properties in residential use. Vehicular access to the drive-through shall be through a separate lane that prevents vehicle queuing within the normal parking area. Adequate queuing space must be provided to prevent any vehicles from having to wait on a public street, within the entry from the street. The drive-through must not interfere with any sidewalk or bicycle path

SECTION 10.7 EROSION AND SEDIMENTATION CONTROL

A. All subdivision, building, site, and roadway designs and layouts must harmonize with existing topography and conserve desirable natural surroundings to the fullest extent possible, such that filling, excavation and earth moving activity must be kept to a minimum. Parking lots on sloped sites must be terraced to avoid undue cut and fill. Natural vegetation must be preserved and protected wherever possible.

B. Erosion and sedimentation control measures shall be designed and implemented according to the *"Maine Erosion and Sedimentation Control Best Management Practices"* by the Maine Department of Environmental Protection (most current edition); except to the extent a specific provision on this Ordinanceis more restrictive than the provision in this reference manual.

    1. Stripping of vegetation, soil removal, and re-grading or other development shall be accomplished in such a way as to minimize erosion.

    2. The duration of soil exposure of the disturbed area shall be kept to a practical minimum. In environmentally sensitive areas, within one hundred (100) feet of bodies of water or a wetland, soils may not be left exposed for more than seven (7) days.

    3. Temporary vegetation, organic mulches (hay, straw, wood chips, etc.), chemical mulches (wood fiber emulsions), siltation fabrics, and/or mats, or combinations thereof, shall be used to protect exposed areas during development. Environmentally sensitive areas shall be protected by silt fencing and additional temporary measurers at all times.

4. Permanent (final) vegetation and mechanical erosion control measures shall be installed prior to the completion of construction, but no later than thirty (30) days after completion of the construction.

5. Until a disturbed area is stabilized, sediment in the runoff water shall be trapped by the use of sediment basins or silt traps. The discharge from the basin should be sheet flow through a vegetated filter strip.

6. The top of a cut or the bottom of a fill section shall not be closer than ten (10) feet to an adjoining propertyunless otherwise mutually agreed to by the affected landowner and the town but in no instance shall said cut or fill exceed a 2:1 slope.

7. During grading operations, methods of dust control shall be employed.

8. On slopes greater than twenty-five percent (25%) there shall be no grading or filling within one hundred (100) feet of the normalhigh water mark of a water body except to protect the shoreline and prevent erosion.

9. All erosion control measures shall be monitored periodically by the applicant and inspected after each rainstorm for signs of failure (erosion, displacement or mulch, etc.). If any of the soil is exposed, re-mulching is required. If erosion or washouts occur, the area must be re-graded and preventative measures re-installed. The site shall be monitored until 95 percent of the permanent grasses or other vegetation is firmly established.

C. **Soil Erosion and Control Plan:** The Code Enforcement Officer or Planning Board shall require a written soil erosion and sedimentation control plan when the disturbed area is larger than twenty thousand (20,000) square feet per acre. A written soil erosion and sedimentation control plan shall be required for all developments that remove the natural vegetation and disturb the soil within the Royal River Corridor Overlay District.

SECTION 10.8 EMISSIONS

Emission of dust, ash, smoke or other particulate matter which can cause damage to human or animal health, vegetation or property by reason of concentration or toxicity, or which can cause soiling beyond property boundaries shall be prohibited. The emission of non-farming odors in such quantities, as determined by the CEO, to be offensive at the lot boundaries, is prohibited. Residential heating devices are exempt from these requirements.

SECTION 10.9 EXTERIOR LIGHTING

A. The proposed development must have adequate exterior lighting to provide for its safe use during nighttime hours, if such use is contemplated.

B. The permitting authority (CEO, Planning Board) may require street lighting along streets, parking areas, at intersections and crosswalks and where various types of circulation systems merge, intersect or split.

C. Lighting may be used which serves security, safety and operational needs but which does not directly or indirectly produce deleterious effects on abutting properties or which would impair the vision of a vehicleoperator on adjacent roadways.

D. Lighting fixtures must be shielded or hooded so that the lighting elements are not exposed to normal view by motorists, pedestrians, or from adjacent dwellings and so that they do not unnecessarily light the night sky. Direct or indirect illumination must not exceed 0.5 foot-candles at the lot line or upon abutting residential properties.

E. Blinking lights are prohibited, unless they are necessary for safety reasons.

F. The maximum height of freestanding lighting shall be the same as the principal building or not exceed thirty-five (35) feet.

G. Spot light type fixtures attached to buildings shall be prohibited unless there is a demonstrated safety or security need for them.

SECTION 10.10 FINANCIAL AND TECHNICAL CAPACITY

A. The applicant shall have adequate financial resources to construct the proposed improvements and meet the standards of these regulations. When the applicant proposes to construct the buildings as well as the development improvements, the applicant shall have adequate financial resources to construct thetotal development. In making the above determinations the Board shall consider the proposed time framefor construction and the effects of inflation. Evidence of financial capacity should be in the form of a letterfrom a bank or other source of financing indicating the name of the project, amount of financing proposed or available, and individual's or institution's interest in financing the project or in the form of a letter from acertified accountant or annual report indicating that the applicant has adequate cash flow to cover anticipated costs.

B. The applicant shall retain qualified contractors and consultants to supervise, construct and inspect therequired improvements in the proposed development. In determining the applicant's technical ability the Board shall consider the applicant's previous experience, the experience and training of the applicant's consultants and contractors, and the existence of violations of previous approvals granted to the applicant.

SECTION 10.11 FLOODPLAIN MANAGEMENT [AMENDED 6/17/24]

A. **Site Plan Review/Subdivision Requirement:** All developments and subdivisions shall include written certification as to the location of the 100-year floodplain boundary to include a map of the 100-year floodplain boundary overlaidonto a U.S.G.S. Quadrangle Map or other topographic map by a professional land surveyor, registered professional engineer or architect. The determination shall be based on engineering practices recognized by the Federal Emergency Management Agency (FEMA) and the provisions of the town's Floodplain Management Ordinance, including the most recent FEMA maps for the town. All proposals include base flood elevations, flood boundaries, and, in a riverine 100-year floodplain, floodway data. These determinations shall be based on engineering practices recognized by FEMA.

B. **Buildings Prohibited on Floodplains**:

1. Buildings are prohibited within the 100-year floodplain area as identified by FEMA on the town's Flood Insurance Rate Maps and Flood Hazard Boundary Maps.

2. The development plan should include a statement that building is prohibited on the 100-year floodplain, and the restriction shall be included in any deed, lease, purchase and sale agreement,or document transferring or expressing intent to transfer any interest in real estate orstructure.

3. 100-year floodplains may be used as woodlands, grassland, pastureland and for passive

outdoor recreation.

4. Piers, docks, wharves, bridges and boat ramps and associated parking are permitted within the 100-year floodplain pursuant to Section 9.1. Residential Shoreland District and Resource Protection District Performance Standards and the town's Floodplain Management Ordinance.

SECTION 10.12 HAZARDOUS, SPECIAL, AND RADIOACTIVE MATERIALS [AMENDED 6/17/24]

A. The handling, storage, and use of all materials identified by the standards of a federal or state agency as hazardous, special or radioactive must be done in accordance with the standards of these agencies. No flammable or explosive liquids, solids or gases shall be stored in bulk above ground unless they are located at least seventy-five (75) feet from any lot line, or forty (40) feet in the case of underground storage. All materials must be stored in a manner and location that is in compliance with appropriate rules and regulations of the Maine Department of Public Safety and other appropriate federal, state, and local regulations.

B. **Reporting Requirement:** Commercial, industrial and other activities that utilize, store or dispose of "reportable" quantities of hazardous or toxic materials shall submit an annual certification that these materials are being handled so as to prevent environmental degradation. "Reportable" means that these companies must file a report with the Maine Department of Environmental Protection.

C. Home Heating Fuel Tanks and Fuel Storage. Propane tanks, or other tanks with liquefied gaseous fuels are allowed. Home Heating fuel tanks and fuel storage of 660 gallons or less is allowed with all residential uses.

SECTION 10.13 HISTORIC AND ARCHAEOLOGICAL SITES

A. If any portion of the site has been identified as containing historic or archaeological resources listed on the National Register of Historic Places, or preliminarily determined to be eligible for listing on the Register, the development must include appropriate measures for protecting these resources, including but not limited to modification of the proposed design of the site, timing of construction, and limiting the extent of excavation.

B. Any proposed land use activity involving structural development or soil disturbance on or adjacent to sites listed on, or eligible to be listed on the National Register of Historic Places, as determined by the CEO or Planning Board shall be submitted by the applicant to the Maine Historic Preservation Commission for review and comment, at least thirty (30) days prior to action being taken by the permitting authority. The permitting authority shall consider comments received from the Commission prior to rendering a decision on the application.

SECTION 10.14 LANDSCAPING, BUFFERS AND SCREENING

A. **Purpose:** The purpose of landscaping, buffers and screening is to define, soften and/or screen the appearance of off-street parking areas or other uses from the public right-of-way and abutting properties, to enhance the physical design of the building(s) and site, and to minimize the encroachment of the proposed use on neighboring land uses.

B. **Standards**:

1. **Landscaping**:

   a. The landscape shall be preserved in its natural state, insofar as practicable, by minimizing tree and soil removal, retaining existing vegetation where desirable, and keeping any grade changes in character with the general appearance of neighboring areas.

b. Landscaping shall be provided along public roads, in public areas, in recreation sites and adjacent to buildings.

c. Deciduous trees should have at least a two-inch caliper at planting and evergreens should be at least four feet tall. Wherever possible, existing large trees should be clumps of trees rather than individual ones. Invasive plants species should be avoided.

d. Landscaping shall be provided as part of the overall site plan design and integrated into buildingarrangements, topography, parking and buffering requirements. Landscaping shall include trees, bushes, shrubs, ground cover, perennials, annuals, plats, grading and the use of buildingand paving materials in an imaginative manner.

2. **Buffers and Screening**:

a. Development must provide for the buffering of adjacent uses where there is a transition from one type of use to another use and for screening of mechanical equipment and service and storage areas.

b. Buffering must be designed to provide a year-round visual screen in order to minimize adverseimpacts. It may consist of fencing, evergreens, berms, rocks, boulders, mounds, or a combination thereof.

c. Landscaping around and within parking lots shades hot surfaces and visually “softens” the hardsurface look of parking areas. Parking areas must be designed and landscaped to create a pedestrian-friendly environment. A landscaped border must be created around parking lots. Any parking lot containing ten (10) or more parking spaces must include one (1) or more landscaped islands within the interior of the lot. There must be at least one (1) island for every twenty (20) spaces. Landscaping must screen the parking area from adjacent residential uses and from the street.Sight vision, safety and appearance should be considered in determining landscaping plans.

d. Garbage collection areas, utility storage areas and similar accessory areas and structures should be buffered.

e. A development must provide sufficient buffering when topographical or other barriers do not provide reasonable screening and where there is a need to: shield neighboring properties fromany adverse external effects of the development, or shield the development form the impact ofadjacent uses.

f. The width of the buffer may vary depending on the treatment of the area. Within densely built-up areas, a buffer with dense plantings, fencing, or changes in grade may be as little as five (5) feetin width. A buffer with moderate levels of planting should be ten (10) feet to fifteen (15) feet in width. In suburban and rural settings, the width of the vegetated buffer should be increased to a minimumof twenty-five (25) feet. Areas adjacent to service, loading, or storage areas should be screened by dense planting, berms, fencing, or a combination thereof with a width of a minimum of five (5) feet.

SECTION 10.15 NATURAL BEAUTY AND AESTHETICS IN THE FARM AND FOREST DISTRICT, RESIDENTIAL SHORELAND DISTRICT AND RESOURCE PROTECTION DISTRICT

In the Farm and Forest District, Residential Shoreland District and Resource Protection District, development in which the land cover type at the time of application is forested shall maintain a wooded buffer strip no less than fifty (50) feet in width along all existing public roads. The buffer may be broken only fordriveways and streets. To the extent practical, building locations shall be at the periphery of open fields, and shall be located within forested portions of the development. When the development contains

no forestor insufficient forested portions to include all buildings, the development shall be designed to minimize theappearance of buildings when viewed from existing public streets.

SECTION 10.16 NOISE

A. The development must control noise levels such that it will not create a nuisance for neighboring properties.

B. The maximum permissible sound pressure level of any continuous, regular or frequent or intermittent source of sound produced by any activity on the site shall be limited by the time period and by the abuttingland use as listed below. Sound levels shall be measured at least 4 feet above ground at the property boundary of the source.

Sound Pressure Level Limits Using The Sound Equivalent Level of One Minute (leq 1) (Measured in dB(a) Scale)		
Abutting Use	**6 a.m. to 10 p.m.**	**10 p.m. to 6 a.m.**
Residential	55	45
Public, Semipublic and Institutional	60	55
Vacant or Rural	60	55
Commercial	65	55
Industrial	70	60

C. Noise shall be measured by a meter set on the A-weighted response scale, fast response. The meter shall meet the American National Standards Institute (ANSI S1 4- 1961) 'American Standards Specificationfor General Purpose Sound Level Meters'.

SECTION 10.17 SEWAGE DISPOSAL [AMENDED 4/30/22]

A. **Subsurface Sewage Disposal**:
   1. All subsurface sewage disposal systems shall be installed in conformance with the State of MaineSubsurface Wastewater Disposal Rules (Rules). The applicant shall submit evidence of site suitability for subsurface sewage disposal prepared by a Maine Licensed Site Evaluator in full compliance with the requirements of the Rules. When sewage disposal is to be accomplished by sub-surface sewage disposal systems, test pit analysis, prepared by a licensed Site Evaluator shallbe provided. A map indicating the location of all test pits dug on the site shall be submitted.

   2. No on-site sewage treatment and disposal system greater than two thousand (2,000) gallon-per-day capacity shallbe approved until the applicant has conducted a hydrogeologic assessment pursuant to Section Water Quality, Subsection D. that demonstrates the following:

      a. The soils are suitable for the expected volume and characteristics of the waste;

      b. The direction of groundwater flow and subsurface conditions are such as not to imperil proposed on-site and off-site water supplies; and

      c. The quality of groundwater at the property line is maintained within federal drinking water standards. The applicant shall base hydrogeologic assessment on soil borings and monitoringwells sufficient to document existing soil, bedrock and groundwater conditions.

      d. As a condition of approval, the applicant may be required to install monitoring wells prior to theinstallation of the subsurface sewage disposal system. The location of the monitoring wells andrecommendations for sampling and analysis shall be prepared by a Maine Certified Geologist. The sampling and analysis shall continue for an appropriate time period to

demonstrate that groundwater quality is maintained.

e. The applicant may also be required to submit copy of the operations and maintenance manualfor the subsurface wastewater disposal system.

f. In the case of a brewery, winery, or distillery the Planning Board may require:

1. The applicant to escrow funds for a third-party engineer to review the design of the wastewater disposal system and its safe containment system in order to prevent potential contamination to the area water supply.

2. A document from the State of Maine verifying the wastewater disposal standards have been met.

B. **Public Sewer System Disposal**:

1. Sewer lines that connect to a municipal sewer system shall not be permitted in the Farm and ForestDistrict, Residential Shoreland District or Resource Protection District. The Planning Board may waive this provision for developments proposed for the "Transitional Residential District" as described within the Comprehensive Plan.

2. In cases where municipal sewerage is proposed, the system shall conform to the standards of theservicing sewer district. The reviewing entity shall require a statement from the sewer district that states whether capacity is available for the project.

SECTION 10.18 SIGNS [AMENDED 6/17/24]

A. For general sign standards, refer to Section 8.7 Signs.

B. Subdivision Standards

a. Permanent signs identifying a subdivision shall meet the requirements set forth in Section 8.7 Signs and also shall be subject to approval pursuant to the standards set forth in Section 5 Subdivision Review and Criteria.

C. Site Plan Review Standards

a. Municipal and Public Safety signs that do not comply with Town Ordinances require Site Plan Review approval by Planning Board.

SECTION 10.19 SOIL SUITABILITY

No land alteration or development shall be permitted in any area where the soil is rated severe or very severe for the proposed activity, according to the Cumberland County Soil Suitability Guide of the U.S. Resource Conservation Service, unless satisfactory on-site evidence is presented to the CEO or Planning Board, with the application for a permit, that construction methods will overcome any pertinent soil inadequacies. If modification of the soil is made meeting the requirements of U.S. Resource Conservation Service for upgrading the area to a rating of "fair" or high, building on the soils initially rated as poor or lower may be permitted.

SECTION 10.20 SOLID WASTE DISPOSAL

A. Proposed developments must provide for adequate disposal of solid wastes, including shingles, lumber, stumps and other construction debris. All solid waste must be disposed of at a licensed disposal facility having adequate capacity to accept the project's wastes.

B. If additional solid waste from the proposed development exceeds the capacity of the municipal solid waste disposal services, causes the town to no longer be in compliance with its license from the Department of Environmental Protection, or causes the town to exceed its contract with a non-municipal facility, the applicant shall make alternative arrangements for the disposal of solid waste. The alternative arrangements shall be at a disposal site, which is in compliance with its license. The Planning Board maynot require the alternative arrangement to exceed a period of five (5) years.

SECTION 10.21 STORAGE OF MATERIALS

A. Exposed non-residential storage areas, exposed machinery, and areas used for the storage or collection of discarded automobiles, auto parts, metals or other Sections of salvage or refuse must have sufficient setbacks and screening (such as a stockade fence or a dense evergreen hedge) to provide a visual buffer sufficient to minimize their impact on abutting residential uses and users of public roads.

B. All dumpsters or similar large collection receptacles for trash or other wastes must be located on level surfaces that are paved or graveled. Where the dumpster or receptacle is located in a yard which abuts a residential or institutional use or a public road, it must be screened by fencing or landscaping.

C. Where a potential safety hazard to children is likely to arise, physical screening sufficient to deter small children from entering the premises must be provided and maintained in good condition.

D. All buffers and screening shall be in accordance with Section 10.13. Landscaping, Buffers and Screening

SECTION 10.22 STORM WATER CONTROL

A. All new construction and development shall be designed to minimize increases in peak rates of storm water runoff from the site in excess of the natural predevelopment conditions. Adequate provisions must be made for the collection and disposal of all storm water that runs off proposed roads, parking areas, roofs, and other surfaces, through a storm water drainage system and maintenance plan, which must nothave adverse impacts on abutting or downstream properties. Peak discharge rates should be limited to the predevelopment levels for the 2-year, 10-year, and 25-year frequency, 24-hour duration storm. Wherepossible, existing natural runoff control features, such as berms, swales, terraces and wooded areas, shallbe retained in order to reduce runoff and encourage infiltration of storm waters. The best management practices as set forth by the Maine Department of Environmental Protection shall be used as a guide for compliance with this requirement, except to the extent a specific provision on this Ordinance is more restrictive than the provision in this reference manual.

B. **Requirements:** The Planning Board may require the installation of ditches, catch basins, piping systems, and other appurtenances for the conveyance, control, or disposal of surface waters. The Planning Board shall require the preparation of a storm water management plan by a Maine registered professionalengineer when more than twenty thousand (20,000) square feet of land is to be disturbed.

In addition, the Planning Board may require the following:

1. Where a development is traversed by a stream, river or surface water drainage-way, or where the Board believes that surface water runoff to be created by the development should be controlled, there shall be provided easements or drainage rights-of-way with swales, culverts, catch basins orother means of channeling surface water within the subdivision and over other properties. The storm water management system shall be designed by a Maine registered

professional engineer.

2. Drainage easements for existing water courses or proposed drainage ways at least thirty (30) feet wide shall be provided and indicated on the plan conforming substantially with the lines of existing naturaldrainage.

3. The biological and chemical properties of the receiving waters must not be degraded by the stormwater runoff from the development site. The use of oil and grease traps in manholes, the use of on-site vegetated waterways, and vegetated buffer strips along waterways and drainage swales, andthe reduction in use of deicing salts and fertilizers may be required, especially where the development storm water discharges within the Groundwater Protection Overlay District.

4. The developer shall provide a statement from the designing engineer that the proposed development will not create erosion, drainage or runoff problems either in the development or in other properties. The peak runoff from the development onto other properties shall not be increased.

5. Storm water runoff control systems shall be designed in conformance with the *Town of North Yarmouth Street Design and Construction Standards Section V.* as applicable.

6. **Maintenance Plan:** Storm water runoff control systems shall be maintained as necessary to ensureproper functioning over the long-term. The Planning Board may require that a written maintenanceplan be submitted with the Plan.

SECTION 10.23 RECREATION AND OPEN SPACE LAND [AMENDED 6/19/21; 4/30/22; 6/17/24]

A. **Applicability and Purpose:** This section is applicable to developments proposed for the Village CenterDistrict and the Village Residential District. The purpose of these provisions is to provide for thedevelopment of useable open space and recreation land within residential neighborhoods, to include, butnot limited to: playgrounds, ball fields, picnic areas, passive open space, and networks of inter-connected trails, walkways and bicycle paths. Landscaping of these areas should be designed to enhance their use for recreation while providing privacy for individual homeowners.

B. Retention of Useable Open Space and Recreation Land:

1. The Planning Board shall require the reservation of land for proposed or future parks, playgrounds,trails, walkways, bicycle paths, or conservation areas to benefit the residents of the proposed development and the general public. Reserved land must be of suitable dimension, topography andgeneral character for the proposed recreational use and must be reasonably accessible to residentsof the development and the public. This land shall be designated as Common Open Space and Recreation Land.

2. The percentage of useable open space and/or recreational land to be reserved shall depend on the identified needs for outdoor recreation in the portion of the town in which the development is located, the proposed lot sizes within the development, the expected demographic makeup of theoccupants of the development, and the site characteristics. The following table provides guidelinesfor determining the amount of useable open space and recreation land that should be set-aside indevelopments.

3. At least seventy five percent (75%) of the common open space shall be contiguous to other common open space area within the parcel being developed. Areas shall be considered contiguous if they are within one hundred (100) ft of each other and there are no impediments to access between areas.

4. No area of common open space shall be less than fifty (50) ft in its smallest dimension and less than ten thousand (10,000) sq ft in total, unless the proposed open space is sufficient to satisfy the requirements of this Section 10.23. Open space not meeting this standard may be permitted but must be for enhancement of the project and will not be counted toward the required common open space requirements.

5. The boundaries of any parcel of open space shall be marked by natural features wherever possible, such as hedgerows, stone walls, edges of woodlands, streams, or individual large trees. Where no such existing demarcations are present, additional plantings, fences, or other landscape features shall be added to enable residents or the public, if applicable, to distinguish where the open space ends and private lot areas begin. Where structural demarcations, such as fences are used, they shall be limited to the extend necessary to accomplish this objective.

Guidelines for the Percentage of Total Parcel to be Reserved for Common Open Space and Recreation Land		
Type of Development	**Average Size of Lots**	**Percentage of Total Parcel to be Reserved**
Single Family Lots	80,000 square feet or greater	1.6%
	40,000 square feet	3.3%
	20,000 square feet	6.5%
	15,000 square feet	8.7%
	10,000 square feet	13.0%

C. **Waivers for Minor Subdivisions:** The Planning Board may waive this requirement for minor subdivisions if the Planning Board makes a written finding, supported by an explanation, that the useableopen space and/or recreation land is not necessary due to the location of the proposed development nearexisting publicly accessible open space/recreation land; or where there are no opportunities to contribute to a network of open space land, or inter-connected trails, walkways and/or bicycle paths. The applicant must submit a written request for the waiver and provide the evidence necessary for the Planning Board to make its written findings.

D. **Ownership and Maintenance of Common Open Space and/or Recreation Land**:

1. All common open space and/or recreation land, facilities and property shall be owned by:

   a. The owners of the lots or dwelling units by means of a lot owners' association;

   b. An association which has as its principal purpose the conservation or preservation of land inessentially its natural condition; or

   c. The town.

2. Further subdivision of the common open space and/or recreation land and its use for other than non-commercial recreation, agriculture, forestry and/or conservation purposes, except for easements for underground utilities and subsurface wastewater disposal systems, shall be prohibited. Structures and buildings accessory to non-commercial recreational or conservation uses may be erected on the common land. When open space is to be owned by an entity other than the town, there shall be a conservation easement deeded to the town prohibiting future development.

3. **Monitoring Fee:** The Planning Board may require a fee for the ongoing monitoring of the management of the common open space and/or recreation land, in compliance with the requirements of the approved plan.

4. The following items must be submitted with the subdivision application:

    a. A description of all common open space and any other lands and facilities proposed to be owned by the Town, a conservation organization, or a homeowner's association, or that will be permanently protected by conservation easements. This description shall include a map indicating the approximate location of these lands and facilities.

    b. A description of proposed ownership arrangements for the parcels identified in Section 10.23.D.1.

    c. A description of the proposed conservation restrictions that will permanently protect these parcels.

    d. A description of proposed arrangements and the responsible party for the long-term stewardship of the common open space including management objectives and techniques for each parcel or area.

E. **Homeowners Association Requirements:**

1. If any of the open space, recreational or other facilities are to be reserved by the individual residential unit owners as common open space or facilities, each unit owner shall own a fractional interest in the common open space or facilities, and the developer shall be required prior to final subdivision plan approval to incorporate a homeowners' association consisting of the individual unit owners, which incorporation must comply with the following:

    a Proposed covenants shall be placed in each deed from the developer to the individual unit owner, which deed covenants shall require mandatory membership in the homeowners' association, and shall set forth the unit owners' rights, interests, privileges and obligations in the association and in the common open space and/or facilities, including homeowners association's responsibility and obligation to maintain and/or monitor the common open spaceand/or any facilities.

    b. The homeowners' association shall develop a system to levy and collect annual charges against any and all individual lot owners to defray any expenses connected with the maintenance of common open space and/or facilities, and this system shall be described in said deed covenantor by some other legal instrument made binding upon the individual unit owner and running withthe land.

    c. The developer shall maintain control of the common open space and/or facilities, and shall be responsible for its maintenance until seventy five percent (75%) of the residential dwelling units/lots in the subdivision have been sold, at which time, the homeowners' association shall be responsible for such maintenance, and this obligation shall be described in said deed covenant or by someother legal instrument made binding upon the individual unit owner and running with the land.

    d. All such proposed deed covenants and other legal documents pertaining to the common openspace and/or facilities shall be reviewed by the Town Attorney, and, if approved by the PlanningBoard, shall be recorded in the Cumberland County Registry of Deeds, and included or referredto in the deed to each unit.

    e. All legal documents required under this subsection must be submitted with the final subdivisionplan application.

SECTION 10.24 WATER SUPPLY [AMENDED 6/17/24]

A. Public Water Supply: When a proposed development is to be served by a centrally managed water system, the complete supply system, including fire hydrants (if necessary), shall be installed at the expense of the developer.

1. The developer shall provide a written statement from the Yarmouth Water District that adequate supply and pressure for both domestic and fire- fighting purposes can be provided without placingan undue burden on the source, treatment facilities, or distribution system involved. The developershall be responsible for paying the costs of system improvements necessary to serve the subdivision or development.

2. The complete design and construction of the system, including the materials, size and location of mains, gate valves, hydrants, and service connections shall be reviewed and approved in writing by the Yarmouth Water District and the North Yarmouth Fire Chief.

B. **Required Connection to Public Water Supply:** The Planning Board may require that any development that is located within one thousand (1,000) feet of an existing or planned water line of the Yarmouth Water District make provisions for connection to the public system. Any such installation shall meet thespecifications and be approved by the Yarmouth Water District prior to installation. When public water supply service will not be available at the time of construction of the development, the Planning Board mayrequire a “capped system” to allow future connection when service becomes available. Any such installation shall be approved by and meet the specifications of the Yarmouth Water District prior to installation.

C. **Individual Wells:** Individual wells shall be sited and constructed to prevent infiltration of surface water, and contamination from subsurface wastewater disposal systems and other sources of potential contamination. Lot design shall permit placement of wells and subsurface wastewater disposal areas in compliance with the Maine Subsurface Wastewater Disposal Laws. Due to the increased chance of contamination from surface water, new dug wells shall be prohibited on lots of smaller than one acre, unless evidence is presented by a certified hydrogeologist or similar expert assuring that a dug well can be safely utilized on the lot. New dug wells shall not be constructed within on hundred (100) feet of the traveled way of any public road if located downhill (where the average gradient is in excess of three percent [3%]) from the public road, or within fifty (50) feet of the traveled way of any public road if located uphill of the public road. This restriction shall be included as a note on the plan and deed restriction to the effected lots. The location ofwells and subsurface wastewater disposal systems shall be shown on the Final Plan.

D. **Fire Protection**:

1. Fire hydrants connected to a public water supply system shall be located no further than five hundred (500) feet from any building.

2. A minimum storage capacity of ten thousand (10,000) gallons shall be provided for a subdivision not served by a public water supply. Additional storage of two thousand (2,000) gallons per lot or principal building shall be provided. The Planning Board may require additional storage capacity upon a recommendation from the Fire Chief. Where ponds are proposed for water storage, the capacity of the pond shall becalculated based on the lowest water level less an equivalent of three (3) feet of ice.

3. Hydrants or other provisions for drafting water shall be provided to the specifications of the North Yarmouth Fire Department. Minimum pipe size connecting dry hydrants to ponds or storage vaultsshall be six inches.

4. Where the dry hydrant or other water source is not within the right-of-way of a proposed or

existingstreet, an easement to the town shall be provided to allow access. A suitable access way to the hydrant or other water source shall be constructed.

SECTION 10.25 WATER QUALITY [AMENDED 6/19/21]

A. Water Quality: No development activity shall deposit on or into the ground or discharge to the waters of the state any pollutant that, by itself or in combination with other activities or substances, will impair designated uses**,** including existing and potential groundwater supplies, or the water classification of the water body.

1. All storage facilities for fuel, chemicals, chemical or industrial wastes, and biodegradable raw materials, must meet the standards of the Maine Department of Environmental Protection and theMaine Fire Marshall's Office.

2. Developments shall not discharge wastewater to a water body without a license from the Maine Department of Environmental Protection.

3. Discharges of storm water shall be treated to remove oil, grease, and sediment prior to discharge into surface waters.

B. **Groundwater:** Land use activities must not adversely impact either the quality or quantity of groundwater available to abutting properties or to public water supply systems. Applicants whose projectsinvolve on-site water supply or sewage disposal systems with a capacity of two thousand (2,000) gallons per day or greatermust demonstrate that the groundwater at the property line will comply, following development, with the standards for safe drinking water as established by the State of Maine. Ground water withdrawals by proposed land use activities shall not lower the water table beyond the boundaries of the development in a way that would impair or significantly diminish the permissible use of groundwater on land outside the development.

C. **Requirements for Hydrogeologic Assessments:** When a hydrogeologic assessment is required, theassessment shall contain at least the following information:

1. A map showing the basic soils types to a Class A (high intensity) Soil Survey

2. The depth to the water table at representative points throughout the development

3. Drainage conditions throughout the development

4. Data on the existing groundwater quality, either from test wells in the development or from existingwells on neighboring properties

5. An analysis and evaluation of the effect of the development on groundwater resources. In the caseof residential developments, the evaluation shall, at a minimum, include a projection of post development nitrate-nitrogen concentrations at any wells within the development, or at the development boundaries; or at a distance of one thousand (1,000) feet from potential contamination sources, whichever is a shortest distance

6. A map showing the location of any subsurface wastewater disposal systems and drinking water wells within the development and within two hundred (200) feet of the development boundaries

D. Projections of groundwater quality shall be based on the assumption of drought conditions (assuming sixty percent (60%) of annual average precipitation).

E. **Subdivision Standards:**

a. No development shall increase any contaminant concentration in the groundwater to more than one halfof the Primary Drinking Water Standards. No subdivision or development shall increase any contaminant concentration in the ground water to more than the Secondary Drinking Water Standards.

b. If groundwater contains contaminants in excess of the primary standards, and the subdivision is to be served by on-site ground water supplies, the applicant shall demonstrate how water quality will be improvedor treated.

c. If groundwater contains contaminants in excess of the secondary standards, the subdivision shall not cause the concentration of the parameters in question to rise above the ambient concentration.

d. Subsurface wastewater disposal systems and drinking water wells shall be constructed as shown on themap submitted with the assessment. If construction standards for drinking water wells or other measures to reduce groundwater contamination and protect drinking water supplies are recommended in the assessment, those standards shall be included as a note on the final plan, and as restrictions in the deedsto the affected lots.

e. The locations of approved subsurface wastewater disposal systems and drinking water well zones shallbe shown on the final plan.

SECTION 10.26 PROTECTION OF SIGNIFICANT WILDLIFE HABITAT [AMENDED 6/19/21]

A. Developments shall be designed to protect and conserve important wildlife habitat to the greatest extentfeasible. Significant wildlife habitats include, but are not be limited to, areas identified and mapped in the Comprehensive Plan and the Beginning with Habitat Program, and by the Maine Department of Inland Fisheries and Wildlife, including habitats for endangered or threatened species, waterfowl and wading birdhabitat, shorebird habitat, deer wintering areas, stream and brook wildlife corridors, and other important wildlife habitats. Other significant wildlife habitats may be identified through on-site field investigation.

B. Applicants shall utilize maps and information from the aforementioned sources to identify and map wildlife habitats within proposed subdivisions and developments. These areas shall be shown on development plans. Proposed developments shall be designed to avoid and/or mitigate adverse impacts to wildlife and identified wildlife habitats.

C. Since wildlife management must take into account many site-specific variables, applicants proposing todevelop land within or adjacent to identified wildlife resources must consult with the Code Enforcement Officer, Maine Department of Inland Fisheries and Wildlife or a wildlife biologist certified by the Wildlife Society and approved by the Planning Board, and obtain a written report to submit with the application. This report shall assess the potential impact of the development on the significant habitat and shall describe appropriate mitigation measures to ensure that the subdivision/development will have no/minimal adverse impacts on the habitat and the species the habitat supports.

D. **Deer Wintering Areas:** The Planning Board may require a management plan for high and moderate value deer wintering areas prepared by a wildlife biologist, who has been selected or approved by the Planning Board.

E. The Planning Board may require deed restrictions and notes on the final plan to reflect any requirements for wildlife protection and or mitigation.

SECTION 10.27 PUBLIC ACCESS TO THE SHORELINE

Any existing public rights of access to the shoreline of a water body shall be maintained by means of easements or rights-of-way or should be included in the open space with provisions made for continued public access. For the purposes of this section "water body" shall include the Royal River, Chandler Brook, the East Branch, Knight's Pond, the Deer Brook wetland, and those sections of Toddy Brook, Deer Brook, Pratt's Brook and an unnamed tributary to Chandler Brook that are zoned as Resource Protection District.

SECTION 10.28 BACK LOTS AND ACCESS [AMENDED 6/19/21; 6/17/24]

A. Back lots shall be prohibited in subdivisions after the adoption of this Ordinance (June 14, 2005).

B. For Back Lot standards that are not part of a subdivision, see Section 8.3 for standards relating to Back Lots and Street Access Requirements for Back Lots.

SECTION 10.29 ACCESS MANAGEMENT STANDARDS [AMENDED 6/19/21]

A. **Applicability:** The following access management standards are applicable to all lots and all public roads located within North Yarmouth, unless stated otherwise. Any driveway or proposed street must be designed so as to provide the minimum sight distance according to the Maine Department of Transportation standards, to the maximum extent possible.

B. **Adequacy of the Public Road System:** Vehicular access to the site must be on public and private roads that have adequate capacity to accommodate the additional traffic generated by the development. The Planning Board may require mitigation when the proposed development is anticipated to result in a decline in the existing level of service. Any project that generates one hundred (100) or more passenger car equivalent trips during peak hour of traffic generation, must obtain a Traffic Movement Permit from the Maine Department of Transportation pursuant to Title 23 M.R.S. Section 704-A.

C. **Safe Sight Distances**:

1. Access shall be designed in profile and grading and located to achieve the required sight distancemeasured in each direction along the public road while maintaining adequate distances from adjacent driveways and intersections.

2. Measurements: for purposes of the sight distance standards, the following provisions shallapply:

   a. The sight distance shall be based on the posted speed limit

   b. Sight distance is measured to and from the point on the centerline of the proposed access that is located ten (10) feet from the edge of traveled way. The height of the hypothetical person's view is considered to be three and a half (3½) feet above the pavement and the height of the object being viewed is considered to be four and a quarter (4¼) foot above the pavement.

   c. Where truck traffic from the development onto the public road is expected to be significant (e.g.,industrial parks, warehousing operations, etc.) increase sight distance by 50 percent. Height ofeye should be six (6) feet with height of object no more than four and a quarter (4¼) feet.

   d. Where recreational vehicle traffic from the development onto the public road is expected to besignificant (as from a campground) increase sight distance by twenty-five percent (25%). Height of eye shouldbe at three and a half (3½) feet with height of object no more than four

and a quarter (4¼) feet.

3. Driveway and intersection road placement shall be such that an exiting vehicle has an unobstructedsight distance according to the following schedule:

Highway Speed (MPH)	Minimum Sight Distance (Feet)
20	155
25	200
30	250
35	305
40	360
45	425
50	495
55	570
60	645

4. A "site triangle" shall be maintained twenty-five (25) feet in length on each side of the intersection of the driveway and the public street or road right-of-way line, with the third side connecting the other two sides. Within each sight triangle, no landscape plants, trees, other than low growing shrubs shall be planted. These shrubs must be no more than thirty (30) inches in height above the driveway elevation.

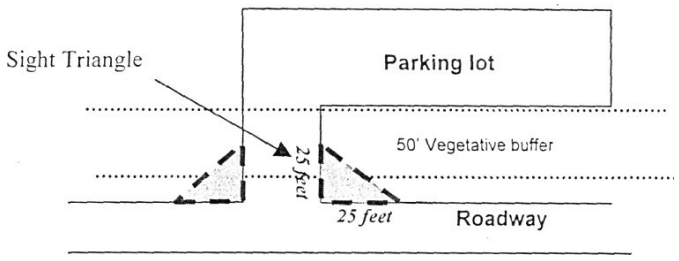

D. **Access Management and Safety Standards:** Driveway and private-right-of-way access points shallbe limited as follows:

1. Points of access and egress must be located to avoid hazardous conflicts with existing turning movements and traffic flows.

2. **Residential Lots** shall be as follows:

   a. Limited to one access point per residential lot, or one access point for every two hundred (200) feet in the Farm and Forest District, Residential Shoreland District and Resource Protection District, whichever is less.

   b. Limited to one access point per residential lot, or one access point for every one hundred fifty (150) feet in theVillage Center District and Village Residential District, whichever is less.

3. **Commercial and Other Non-Residential Lots shall be as follows**:

   a. Limited to two access points per lot, or one access point every two hundred (200) feet in the Farm and ForestDistrict, Residential Shoreland District and Resource Protection District, whichever is less.

   b. Limited to two access points per lot, or one access point for every one hundred fifty (150) feet in the Village CenterDistrict and Village Residential District, whichever is less.

4. **Shared Driveways:** Shared driveways shall be encouraged for adjacent sites, in order to minimizethe number of driveways along public roads. The Planning Board may allow for a reduction in the minimum street frontage requirement by ten (10) percent when the applicant agrees to provide a common driveway/right-of-way for multiple lots and/or uses.

5. **Road, Pedestrian and Bicycle Connections Between Developments:** For all projects, provisions for vehicular circulation connections to future projects on adjacent properties shall be encouraged wherever feasible and to the maximum extent possible. Pedestrian and bicycle connections may also be required in accordance with Section 10.33. Pedestrian Ways and BicycleAccess, Circulation and Facilities. Where appropriate and feasible, shared circulation roads for major non-residential projects shall be located at least 100 feet from the main highway in order to avoid intersection conflicts. This requirement may be waived in cases where connectivity would result in the disruption of community character.

6. **Subdivisions:** Driveway access for individual lots within a subdivision shall be via an internal subdivision street; driveways shall not have direct access to existing public roads. This requirementmay be waived when the Planning Board determines physical conditions particular to the parcel justify granting a waiver. Access limitations shall be noted on the plan and in the deed of each subdivision lot.

7. **Corner Lot Access:** Where a lot has frontage on two or more streets, the access to the lot shall be provided to the lot across the frontage and to the street where there is lesser potential for trafficcongestion and for hazards to traffic and pedestrians. This requirement may be waived where theapplicant demonstrates that existing site conditions preclude the location of the driveway to the street where there is lesser potential for traffic congestion and for hazards to traffic and pedestrians,or that the location of the driveway to the street where there is lesser potential for traffic congestion and for hazards to traffic and pedestrians would negatively impact a predominately residential neighborhood.

8. **Access Ways to Non-Residential Developments** shall be designed to avoid queuing of entering vehicles on any public road. Left lane storage capacity shallbe provided to meet anticipated demand. The Planning Board may require a traffic assessment todetermine if a turning lane is necessary.

9. **Driveway Turn-Around Area:** After the effective date of this Ordinance (June 14, 2005), all futuredriveways shall be designed with sufficient vehicle turn-around area to enable a driver to exit the premises without backing into the public road. The requirements shall be deemed to be met by anon-site parking lot with a parking aisle, or by a service or frontage road, or by the use of an on-sitedriveway turn-around for a single vehicle measuring at least eight (8) feet wide by fifteen (15) feet long.

10. **Driveway Grades:** The grade of any proposed driveway should not be more than plus three (±3) percent for a minimum of forty (40) feet from an intersection.

11. **Access Way Location and Spacing:** Access ways must meet the following requirements:

    a. New public and private entrances/exits must be located at least fifty (50) feet from the closest unsignalized intersection and one hundred fifty (150) feet from the closest signalized intersection, as measured from the point of tangency for the corner to the point of tangency for the access way. This requirement may be reduced if the shape of the site does not allow conformance with this standard and the applicant demonstrates a hardship as required in 11.c. below.

    b. New public and private entrances/exits must be located at least fifty (50) feet from existing

private roads, as measured from the point of tangency for the corner to the point of tangency for the access way. This requirement may be reduced if the shape of the site does not allow conformance with this standard and the applicant demonstrates a hardship as required in 11.c. below.

c. **Demonstration of No Alternative:** The Planning Board may approve a reduction in the accessway location and spacing requirements in 11.a. and/or 11.b when the applicant demonstrates that the shape of the lot and the location of existing roads does not allow conformance with thestandards, and that there is no other alternative other than a reduction in the access way location and spacing requirements. The applicant must submit a site plan, done to scale, that demonstrates that all alternatives for meeting these requirements have been explored and thatwithout a reduction in the location and spacing, the development or subdivision would not be possible.

SECTION 10.30 SUBDIVISION STREET CONNECTIVITY REQUIRED IN THE VILLAGE CENTER AND VILLAGE RESIDENTIAL DISTRICTS [AMENDED 6/19/21]

A. **Purpose:** The purpose of this section is to support the creation of a connected transportation network within the Village Residential District and the Village Center District to provide choices for drivers, bicyclistsand pedestrians; to promote walking and bicycling; to connect neighborhoods to each other and to local destinations such as schools, parks and commercial areas; to reduce vehicles miles of travel and travel times; to reduce emergency response times; to increase the effectiveness of town service delivery; and to free up state road capacity to better serve regional long distance travelneeds.

B. **Applicability:** These standards are applicable to all subdivisions proposed for the Village Center District and the Village Residential District.

C. **Requirements**:

1. All proposed subdivision streets shall be designed as public through roads, and shall provide connection to the nearest public through road. see Table 2

2. The proposed street system shall be designed to provide vehicular connections to all similar or compatible adjacent uses (existing and future). Such connections shall be provided during the initialphase of the project approximately every one thousand (1,000) feet for each direction (north, south, east, west) inwhich the subject property will be required to provide a connection, if it is determined by the Planning Board that the connection in that direction can best be accomplished through the subject property. When the Planning Board deems a vehicular connection impractical, it can increase the length requirement and/or require pedestrian connections.

3. All streets, pedestrian and bicycle paths and access ways in the development's proposed transportation system shall continue through to the boundary lines under the same ownership as the subdivision.

4. Redevelopment and road improvement projects shall take advantage of opportunities for retrofittingexisting roads or rights-of-way to provide increased vehicular, pedestrian and bicycle connectivity.

5. If connection to an existing public road is not possible at the time of the subdivision, a temporary dead end road shall end in a cal du sac as described in Section 8.4 (most current version). A right-of-way shall be extended from the hammerhead turn-around to the neighboring property line for future extension. The right-of-way shall be dedicated to the town. This shall be labeled "Future Street Extension" on all plans of the project and noted in all deeds.

6. Reserved streets for future street connections to adjoining undeveloped property shall be requiredby the Planning Board to be dedicated to the town. The developer of the adjoining property can berequired by the Planning Board to connect to and build over the reserved strips. Reserved strips not to be used shall be dispensed with according to 23 M.R.S. Section 3027.

7. **Waivers:** The Planning Board may waive the requirement for connectivity when existing natural features and natural resources are located in such a fashion as to prevent connections to an existing or future public street, and/or when the only connection available is with an incompatible adjacent use, such as a gravel pit or an industrial use. When the Planning Board waives the requirements for connectivity, the following standards shall apply:

   a. No dead end street or portion of a street shall exceed five hundred (500) feet in distance from a public throughstreet to the center of the turn-around. The aforementioned public through street may include aportion of the proposed subdivision street that has been accepted by the Select Board as a Town Road.

   b. All dead end streets shall end in a hammerhead turn-around designed in accordance with Section VIII Section 8.4 Design and Construction Standards for Roads and Driveways and the town's Roadway Ordinance.

   c. No driveways may be built off of any turn-around.

   d. Provisions shall be made to assure adequate emergency access to all lots.

SECTION 10.31 SUBDIVISION STREET LENGTH AND CONNECTION REQUIREMENTS IN THE FARM AND FOREST DISTRICT AND RESIDENTIAL SHORELAND DISTRICT [AMENDED 6/19/21]

A. **Purpose:** The purpose of these requirements is to assure adequate emergency access to residenceswithin rural subdivisions, and to promote connectivity of the town's street system.

B. **Standards**:

1. No more than twelve (12) residential units or lots shall be constructed or created on a dead end streetunless there is an emergency second access street to a public through road. Emergency second access streets shall be on rights-of-way that are at least fifty (50) feet wide. The emergencysecond access street shall have a traveled way of at least eighteen (18) feet wide. The Planning Board may allow a narrower traveled way width to mitigate environmental impacts, such as impacts on wetlands, but may not reduce the required traveled way width to less than twelve (12) feet. The emergency second access street must be adequate to allow for snow plowing and emergencyaccess by fire trucks. Gravel may be used as a road surface. The emergency second access street shall be suitable for year-round use, and shall meet or exceed the applicable construction standards (materials and depths) for rural streets in the *Section VIII Section 8.4 Design and Construction Standards for Roads and Driveways*. Emergency second access streets shall be plowed and maintained year-round by a Homeowner's Association or the developer.

2. In no case shall a dead-end street with only one point of access to a public through road exceed two thousand (2,000) feet in linear length including the hammerhead portion of the road. Loop portions of dead endstreets shall not be included for purposes of computing the linear length of the dead end street.

3. **Connectivity Requirements:** The design of subdivision streets shall provide for the continuation of streets to and from adjacent subdivisions and/or undeveloped land, where the Planning Board determines that interconnection of streets is physically feasible and would

contribute to the safety and function on the street system. If connection to an existing street is not possible at the time of the subdivision, a temporary dead end street shall end in a hammerhead turn-around designed in accordance with the*, Section VIII 8.4 Design and Constructions Standards for Roads and Driveways* and the town's Roadway Ordinance*.* A right-of-way shall be extended from the hammerhead turn-around to the neighboringproperty line for future extension. The right-of-way shall be dedicated to the town. This shall be labeled "Future Street Extension" on all plans of the project and noted in all deeds. Reserved streetfor future street connection to adjoining undeveloped property shall be dedicated to the town. The developer of the adjoining property can be required by the Planning Board to connect to and buildover the reserved strips. Reserved strips not to be used shall be dispensed with according to 23 M.R.S. Section 3027.

SECTION 10.32 PEDESTRIAN WAYS AND BICYCLE ACCESS, CIRCULATION AND FACILITIES [AMENDED 6/19/21]

A. **Applicability and Purpose:** The provisions of this section are applicable to all subdivisions and developments. The purpose of these requirements is to provide networks of well-designed, connected pedestrian ways (sidewalks, path, trails) and bicycle ways that link the project with residential, recreational,and commercial facilities, schools, bus stops, and existing sidewalks in the neighborhoods or, when appropriate, to connect with amenities such as parks or open space on or adjacent to the site. Bicycles willbe expected to share the road with automobiles in subdivisions and developments where traffic speeds are low. However, separate bicycle lanes are needed along Routes 115, 231, 9 and North Road. Other facilities, such as bicycle parking facilities, school bus stops, and park benches are also envisioned.

B. **Standards**:

1. **Village Center District and Village Residential District:** Sidewalks shall be provided on at leastone side of the road in subdivisions and residential developments within the Village Center Districtand the Village Residential District. The Planning Board may waive this requirement for residentialdevelopments with less than 10 units/lots located on terminally; dead end roads where the applicanthas demonstrated that future connection to other walkways (sidewalks, paths, trails) would not bepossible.

2. **Farm and Forest District and Residential Shoreland District, Resource Protection District:** The Planning Board may require sidewalks, including paths and trails in major subdivisions with ten (10)or more lots or residential units, if the Planning Board makes a written finding that includes an explanation of the need. In determining the need for sidewalks, paths or trails, the Planning Boardshall consider the location and density of the development and the need to connect with existing orfuture adjacent pedestrian ways, including sidewalks, trail systems and public land, and the need to provide safe walkways within the development.

3. Sidewalks shall be designed in accordance with the requirements of the *Town of North Yarmouth Street Design and Construction Standards Section VIII* (most current version as of the date of a complete application).

4. Where sidewalks, paths or trails exist adjacent to a proposed subdivision or development, the newsidewalks, paths or trails shall be installed to connect to existing sidewalks, paths or trails. In areaswhere sidewalks, paths or trails do not currently exist, but where they are anticipated, area shall bereserved for the development of future sidewalks, paths and trails.

5. **Site Plan:** The site plan must provide for a system of pedestrian ways within the development appropriate to the type and scale of development. This system must connect the major building entrances/exits with parking areas and with existing sidewalks, if they exist or are planned in the vicinity of the project. The pedestrian network may be located either in the street right-of-

way or outside of the right-of-way in open space or recreation areas. The system must be designed to linkthe project with residential, recreational, and commercial facilities, schools, bus stops, and existing sidewalks in the neighborhood or, when appropriate, to connect with amenities such as parks or open space on or adjacent to the site.

6. **Parking Plans:** All parking plans shall include a bicycle and pedestrian circulation plan. The plan shall show the locations where bicycles and pedestrians are likely to travel both into the site and within it. The parking plan shall be designed to provide safe pedestrian and bicycle access, and shall propose improvements necessary to link pedestrian and bicyclists from identified points outside of the development.

   a. The parking plan shall delineate bicycle-parking facilities for commercial, recreational, and institutional developments. Such facilities shall be located as close as possible tothe principal building(s). The provision of bicycle parking may be used to offset the number of automobile spaces required.

   b. Pedestrian ways shall be provided within and between parking areas and between buildings, streets, roads, and other parking areas.

   c. In the Village Center District and the Village Residential District, all applications with parking plans containing ten (10) or more new parking spaces shall provide sidewalks on portions of their frontage that abut a public road.

SECTION 10.33 INTERNAL VEHICULAR CIRCULATION [AMENDED 6/19/21]

A. The layout of the site must provide for the safe movement of passenger, service, and emergency vehicles through the site.

   1. Nonresidential projects that will be served by delivery vehicles must provide a clear route for suchvehicles with appropriate geometric design to allow turning and backing for the largest delivery vehicles anticipated.

   2. Clear routes of access must be provided and maintained for emergency vehicles to and around buildings and must be posted with appropriate signage (fire lane - no parking).

   3. The layout and design of parking areas must provide for safe and convenient circulation of vehiclesthroughout the lot with consideration for pedestrian movement.

   4. All roadways must be designed to harmonize with the topographic and natural features of the site insofar as practical by minimizing filling, grading, excavation, or other similar activities which result in unstable soil conditions and soil erosion, by fitting the development to the natural contourof the land and avoiding substantial areas of excessive grade and tree removal, and by retaining existing vegetation during construction. The road network must provide for vehicular, pedestrian, and cyclist safety, all season emergency access, snow storage, and delivery and collection services.

SECTION 10.34 OFF STREET PARKING [AMENDED 6/19/21; 6/17/24]

A. **Applicability:** Off street parking shall be provided for all new construction, expansions, and changes of use in accordance with the requirements and standards in this section. Off street parking, in addition tobeing a permitted use, shall be considered as an accessory use when required or provided to serve conforming uses located in any district. This section does not apply to single family residential units.

B. **General Requirements:** Proposals subject to development review shall be accompanied by plans

andinformation making provision for off-street parking. Such plans shall attempt to balance the provision of adequate parking for the project under review while minimizing the development of visible paved areas. Parking areas must be constructed to protect the natural environment and visual character of the community, improve pedestrian safety and accessibility, and promote the quality of life in developed areas.

C. **Parking Layout and Design:** Off-street parking must conform to the following standards:

1. Parking shall be provided on the lot occupied by the use for which the parking is required, or on anadjacent lot owned or controlled by such use.

2. Parking areas with more than two (2) parking spaces must be arranged so that it is not necessary for vehicles to back into the public road. In no instance shall off-street parking be designed so that vehicles back out into Routes 115, 9, 231 or North Road.

3. Off-street parking shallbe located behind or to the side of the principal building and shall be landscaped. All parking spaces, access drives, and impervious surfaces must be located at least five (5) feet from any side or rear lot line, except where standards for buffer yards require a greater distance or where two adjacent lots share a parking lot.

4. All plans for parking areas shall include a landscaping plan which adequately screens parking lots,and that provides interruptions of parking spaces.

5. The joint use of a parking area by two or more principal buildings or uses may be approved whereit is clearly demonstrated that the parking area would meet the intent of this section in the probabletime of maximum use by patrons and employees. In approving shared parking, the permitting authority shall require cross-easements or other legally enforceable documents for shared parkingwhich permanently ensure the shared parking arrangement.

6. Parking areas shall be constructed with a suitably durable surface that minimizes dust and is appropriate for the use of the land, with adequate drainage. Surfacing, grading and drainage shallfacilitate groundwater recharge by minimizing impermeable pavement and run-off. Oil traps may be required for larger paved parking lots. Parking areas to be used at night shall be lighted in a manner that does not result in direct lighting to or glare to abutting residential properties or cause a traffic hazard due to glare.

7. All individual parking spaces shall be nine (9) feet by eighteen (18) feet. The provision for oversized parking spacesshall be permitted for activities that normally serve oversize vehicles, such as recreation vehicles and trucks. Aisles shall be a minimum of twenty-four (24) feet for two-way traffic, and fourteen (14) feet for one-way traffic.

Parking Guidelines	
USE	**Parking Spaces Required (Minimum)**
Residential: Single Family, Duplex	2 per dwelling unit
Multiple Residential Units in a permitted Building Type	1.0 spaces per dwelling unit
Home Business	2 spaces in addition to required parking for residence (may be reduced by Board of Appeals)
Municipal Use	1.25 spaces per employee plus 1 space per 150 square feet of floor area for public assembly & meeting room space
Institutional and/or Places of Public Assembly, such as Theaters, Auditoriums, Churches, Synagogues, Gymnasiums, Stadiums, Sports Arenas	1 space per 4 seats plus 1 space per 2 employees
Day Care Center and Nursery School	1 per employee/volunteer worker plus a safe area for vehicle pick-up and drop-off of students/children
Schools	Grades K-8: 1 space per classroom plus 1 space for each employee plus parking in accordance with the places of public assembly Secondary: 8 spaces per classroom plus parking in accordance with the places of public assembly
Commercial Retail Sales	3 spaces per 1,000 square feet plus 1 space per employee
Gas and/or Service Station; Auto Repair Garage	.25 space per fuel pump plus 1 space per employee plus 4 spaces per service bay
Banks	4 spaces per 1,000 square feet of floor area
Personal Services, Business Services, Business and Professional Offices (non-medical)	3 spaces per use or 4 spaces per 1,000 square feet of floor area (or 1 space per 250 square feet of floor area or portions thereof), whichever is greater
Restaurants/Eating Places	1 space per 4 patrons at capacity plus 1 space per employee
Commercial Accommodations	1 space per guest room plus 1 space per employee
Bed and Breakfast Inn	2 spaces plus 1 space per guest bedroom
Veterinary Clinics	4 spaces per doctor plus 1 space per other employee
Light Industrial	1 space for each 1.2 employees, based on the highest expected average employee occupancy
Funeral Homes	1 space for each 75 square feet of floor in slumber rooms, parlors and individual services rooms
Other Uses	As determined by the Planning Board based upon the latest edition of the *Institute of Transportation Engineers Parking Generation Manual* or data of actual parking demands of similar uses

Notes:

1. The minimum number of spaces shall be rounded up to the nearest whole number.

2. The maximum number of employees scheduled during peak demand/shift overlap shall be used in calculating the number of required parking spaces when employee is referenced in this table. See definition of "floor area" in Section XII. Definitions.

8. In lots utilizing diagonal parking, the direction of proper traffic flow must be indicated by signs, pavement markings or other permanent indications and maintained as necessary.

D. **Parking Space Requirements**: The number and layout of parking spaces shall be based on the need to protect the public safety and convenience while minimizing harm to the character of the community and to environmental, historic and scenic resources. Since land use activities can vary widely in their need for off-street parking, it is appropriate to establish parking requirements based on the specific operational characteristics of the proposed uses. The parking guidelines in the following table shall be applied according to the following criteria. In applying or modifying the parking guidelines for any proposed use, the reviewing authority shall consider the following:

1. Parking spaces shall be sufficient to accommodate the use during a typical week.

2. The size of the structure(s) and the site.

3. The environmental, scenic, or historic sensitivity of the site. In cases where sufficient area for parking cannot be created on the site without disturbance to these resource values, the reviewingauthority may require a reduction in the size of the structure so that the available parking will be sufficient.

4. The availability of on-street parking.

5. Availability of off-site, off-street parking that is open to the public, owned or controlled by the applicant, or available on a shared unit basis.

6. Consideration of pedestrian and bicycle safety.

7. Other standards used in generally accepted traffic engineering and planning manuals.

E. **Waivers:** The requirements of this subsection may be waived in situations where a primary structure existed on the parcel as of June 14, 2005, and there is no other alternative for siting parking, or where compliance would be impractical.

SECTION 10.35 OFF STREET LOADING REQUIREMENTS

A. Loading requirements vary with the specific uses proposed. Loading requirements shall be applied to ensure that trucks load and unload cargo in a manner that does not interfere with pedestrian and automobile movements on public roads. Requirements for the number and location of loading facilities shall be established case-by-case based upon the following:

1. The expected maximum number of trucks using the loading facilities at times of peak usage.

2. The type of business, size of the structure, and size of trucks to be servicing the structure.

3. The location of the loading facility away from potential pedestrian, automobile and bicycle traffic conflicts.

4. The need to screen trucks and loading facilities from publicly accessible areas as well as from abutting properties, including the need for vegetative screening, buffers, and/or fencing.

5. The desirability of requiring service roads or alleys to achieve the purposes of this subsection.

6. Other operational characteristics of the business or physical characteristics of the site deemed appropriate by the reviewing entity or official.

7. The need to maintain the traditional layout and historic character of the town center, which may preclude the establishment of modern loading facilities in some locations.

8. The loading facility shall be sited in a manner that minimizes noise impacts on other property. Mitigation measures shall be employed to ensure that noise is minimized.

XI. STANDARDS FOR SPECIFIC ACTIVITIES

SECTION 11.1 ACCESSORY DWELLING APARTMENTS [AMENDED 5/17/08; 6/17/24]

A. **Purpose:** The purpose of this provision is to allow an affordable housing option that is in keeping with the character of the community. This provision allows for the creation of a single, subordinate accessory dwelling unit incidental to an existing or new single-family dwelling.

B. **Standards and Requirements:** One (1) accessory dwelling unit may be constructed on the same lot as a single-family dwelling unit in any area in which housing is allowed, subject to the requirements of the following criteria:

1. Private, state, or local standards such as homeowners' association regulations, deed restrictions, setbacks, density, septic requirements, shoreland zoning and subdivision law may also apply to lots.

2. An accessory dwelling unit may be constructed only:

   a. Within an existing dwelling unit on a lot;

   b. Attached to a single-family dwelling unit;

   c. As a new structure on a lot for the primary purpose of creating an accessory dwelling unit; or

   d. Within an existing accessory structure.

3. Dimensional Requirements:

   a. For an accessory dwelling unit located within a single-family dwelling unit or attached to a single-family dwelling unit, the dimensional requirements and setback requirements of the accessory dwelling unit must be the same as the dimensional requirements and setback requirements of the single-family dwelling unit.

   b. For an accessory dwelling unit permitted in an accessory structure existing as of July 1, 2023, the required setback requirements in this Ordinance of the existing accessory structure apply.

   c. An accessory dwelling unit is allowed on a lot that does not conform to this Ordinance if the accessory dwelling unit does not further increase the nonconformity, excluding lot area.

4. Accessory dwelling units are exempt from any density or lot area requirements related to the area in which the accessory dwelling unit is constructed.

5. The accessory dwelling unit is limited to one (1) bedroom.

6. Accessory Dwelling Units Size:

   a. An accessory dwelling unit, whether constructed within, attached to, or detached from the single-family dwelling, shall not exceed forty (40) percent of the available living area of the principal single-family dwelling (excluding the basement of the single-family dwelling).

   b. An accessory dwelling unit must be at least 190 square feet in size, unless the Technical Building Code and Standards Board, pursuant to 10 M.R.S. § 9722, adopts a different minimum standard; if so, that standard applies.

7. The Code Enforcement Officer (CEO) approves the accessory dwelling unit. The CEO shall require an owner of an accessory dwelling unit to provide writing verification that the proposed accessory dwelling unit is to be connected to adequate water and wastewater services prior to certification of the accessory dwelling unit for occupancy. Written verification must include the following:
   Water and Wastewater:

   a. If an accessory dwelling unit is connected to a septic system, proof of adequate sewage disposal for subsurface wastewater. The septic system must be verified as adequate by a local plumbing inspector pursuant to 30-A M.R.S. §4221. Plans for a subsurface wastewater disposal must be prepared by a licensed site evaluator in accordance with 10-144 C.M.R. Chapter 241, Subsurface Wastewater Disposal Rules;

   b. If an accessory dwelling unit is connected to a public, special district or other centrally managed water system, proof of adequate service to support any additional flow created by the unit, proof of payment for the connection and the volume and supply of water required for the unit; and

   c. If an accessory dwelling unit is connected to a well, proof of access to portable water, including the standards outlined in 01-672 C.M.R. Chapter 10 section 10.25(J), Land Use Districts and Standards. Any test of an existing well or proposed well must indicate that the water supply is potable and acceptable for domestic use.

8. The owner of the property must occupy either the accessory dwelling unit or the principal dwelling unit.

9. Accessory dwelling units shall be exempted from meeting the requirements of Section 3.3.E. Residential Growth Limitation.

10. Accessory dwelling units are not subject to any additional vehicle parking requirements beyond the parking requirements of the single-family dwelling unit on the lot where the accessory dwelling unit is located.

SECTION 11.2 AFFORDABLE HOUSING [AMENDED 6/19/21; 6/17/24]

11.2.1 VILLAGE CENTER (VC) DISTRICT AFFORDABLE HOUSING DENSITY BONUS

A. Purpose:

The purpose of these provisions is to provide incentives for the development of affordable housing consistent with 30-A M.R.S. §4364 as the Village Center (VC) District is the Town's designated growth area pursuant to 30-A M.R.S. § 4349-A(1)(A).

B. Minimum Lot Size Requirements:

All lots must comply with 12 M.R.S. § 4807-A. Minimum lot size required.

C. Water and Wastewater Requirements:

The property owner must provide written verification that each unit of the housing development is proposed to be connected to adequate water and wastewater services prior to certification of the development for occupancy. Written verification must include the following:

1. If a public or special sewer district is constructed within the Village Center (VC) District, or if a comparable sewer system is proposed, proof of adequate service to the support any additional flow created by the unit and proof of payment for connection to the system.

2. If a housing unit is connected to a septic system, proof of adequate sewage disposal for subsurface wastewater. The septic system must be verified as adequate by a local plumbing inspector pursuant to 30-A M.R.S. § 4221. Plans for a subsurface wastewater disposal must be prepared by a licensed site evaluator in accordance with 10-144 C.M.R. Chapter 241, *Subsurface Wastewater Disposal Rules*.

3. If a housing unit is connected to a public, special district or other centrally managed water system, proof of adequate service to support any additional flow created by the unit, proof of payment for the connection and the volume and supply of water required for the unit.

4. If a housing unit is connected to a well, proof of access to potable water, including the standards outlined in 01-672 C.M.R. Chapter. 10 section 10.25(J), *Land Use Districts and Standards*. Any test of an existing well or proposed well must indicate that the water supply is potable and acceptable for domestic use.

D. Long-Term Affordability:

In order to receive a certificate of occupancy or other final approval of an affordable housing dwelling unit, the owner of the affordable housing development must (1) execute a restrictive covenant that is enforceable by a party acceptable to the Town; and (2) record the restrictive covenant in the Cumberland County Registry of Deeds to ensure that for at least thirty (30) years after completion of construction.

1. For rental housing, occupancy of all the units designated affordable in the development will remain limited to households at or below 80% of the area median income, as defined by the U.S. Department of Housing and Urban Development (HUD), at the time of initial occupancy; and

2. For owned housing, occupancy of all the units designated affordable in the development will remain limited to households at or below 120% of the area median income, as defined by the U.S. Department of Housing and Urban Development (HUD, at the time of initial occupancy.

E. Density Bonus:

1. To receive the density bonus and be considered an affordable housing development, as defined in Section 12, a majority of the total units on the lot must be designated as affordable.

2. The affordable housing development shall be allowed a dwelling unit density of at least 2.5 times the base density that is otherwise allowed in that location or by building type; and

3. No more than two (2) off-street motor vehicle parking spaces for every three (3) dwelling units shall be required for an affordable housing development.

4. If fractional results occur when calculating the density bonus or parking requirement in this subsection, the number of units or parking spaces is rounded down to the nearest whole number.

F. **Residential Growth Limitation Waiver**: The Planning Board shall waive the requirements of Section 3-3.E. Residential Growth Limitation, for the affordable housing development, if the developer can assure to the Planning Board's satisfaction that a majority of the total units meet the criteria set forth in 30-A MRS 4364 such that developments will be designated as an affordable housing development, Village Center District, as defined in Section XII, and remain affordable for the next thirty (30) years.

11.2.2 – AFFORDABLE HOUSING BONUS FOR DISTRICTS OUTSIDE THE VILLAGE CENTER

A. **Purpose**:

1. The purpose of these provisions is to provide incentives for the development of affordable housing outside the Village Center (VC) District,with the following priorities:

   a. To provide an adequate supply of affordable housing to meet the needs of senior citizens, municipal and school employees, and others with modest incomes.

   b. To encourage lifetime residency - to facilitate townspeople remaining in the town after their children have grown up and during retirement years by providing affordable senior housing thatis compatible with “senior living lifestyles”.

   c. To encourage the development of affordable housing consistent with the existing character ofthe town.

2. These provisions are intended to provide the Planning Board with flexibility to waive requirements that impede development of qualified affordable housing, provided that the Planning Board, in its discretion, determines that the proposed affordable housing meets the purposes of this Section to the maximum extent feasible.

B. **Applicability:** These provisions shall apply to any affordable housing as defined in Section XII. Definitions and outside of the Village Center (VC) District. Affordable housing pursuant to these provisions must be approved by the Planning Board through Site Plan Review or Subdivision Review.

C. **Standards and Requirements**:

1. Affordable housing units shall be geographically dispersed throughout the development where feasible, and the dwelling units shall be compatible with the design of the remainder of the development in terms of appearance.

2. An affordable housing unit shall not have more than fifteen hundred (1,500) square feet of living space. The PlanningBoard shall require deed restrictions that prohibit future expansion of the square footage of living space.

3. The affordable housing lots/units shall be constructed concurrently with the remainder of the project.

4. Affordable housing may be developed as a clustered housing development pursuant to Section 11.3. Clustered Housing Developments. Affordable housing may be condominiums.

5. **Net Residential Density Bonus:** The Planning Board may grant a twenty percent (20%) net residential density bonus for the development of affordable housing units, if the developer can assure to the Planning Board’s satisfaction that at least twenty percent (20%) of the total number of residential dwelling units in the proposed development will remain affordable to low and/or moderate income families for the next twenty-five (25) years, and that preference will be given to individuals and families as described in A.1 above. The density bonus shall be calculated such that when the percentage of lots or units ismore than .5 the bonus number of lots/units shall be rounded up, and when percentage of lots or units is .5 or less the bonus number of lots/units shall be rounded down. For example, if 12 lots areproposed, two (2) of the lots must be affordable housing units (12 times 20% = 2.4, rounded down to 2 lots) If thirteen (13) lots are proposed, three (3) of the lots must be affordable housing units (13 times 20% = 2.6, rounded up to 3 lots). The Planning Board shall not grant a net residential density bonus within theRoyal

River Corridor Overlay District, Residential Shoreland District or the Resource Protection District. **The Planning Board shall not grant a net residential density bonus for any development located within the Groundwater Protection Overlay District, unless sewer serves the development.**

6. **Residential Growth Limitation Waiver:** The Planning Board shall waive the requirements of Section 3-3.E. Residential Growth Limitation, for the affordable housing units, if the developer canassure to the Planning Board's satisfaction that at least twenty percent (20%) of the total number of residential dwelling units in the proposed development will remain affordable to low and/or moderate income families for the next twenty-five (25) years, and that preference will be given to individuals and families as described in A.1 and A.2 above.

7. **Long-Term Affordability Required for All Affordable** Housing: Long-term affordability must be assured for a period no less than twenty-five (25) years through deed restrictions or some other recorded instrument acceptable to the Town Attorney. The developer of affordable housing shall include provisions for preserving affordability, which shall be reviewed by the town attorney prior to Select Board and Planning Board review of the proposed long-term affordability agreement. A third party that has the expertise and resources to undertake and continue the task of assuring the long-term affordability of the housing may administer the affordability program. The following standardsshall be applied to affordable owner occupied and rental housing:

   a. **Owner Occupied Residences:** When the affordable housing includes units to be sold as residences, the developer shall use legal mechanisms such as, but not limited to, restrictive covenants, ground leases, or "soft" mortgages to ensure that the residences are owner-occupied and that the initial and subsequent sales prices are affordable to target groups for a minimum of twenty-five (25) years. Preserving long-term affordability may mean restrictions on resale to qualified buyers, if available, granting a right of first refusal to the town, or the town's designee.Additional restrictions limiting the owner's ability to improve the property and/or to recoup somepart of the costs of the improvements at resale are also to be considered.

   b. **Rental Units:** When an affordable housing includes rental units, provisions shall be made to ensure that the rental price of units remains affordable to the target groups for a minimum of twenty five (25) years.

SECTION 11.3 CLUSTERED HOUSING DEVELOPMENT AND OPEN SPACE DEVELOPMENT [AMENDED 6/19/21]

A. **Purpose**:

1. The purposes of these provisions are as follows:

   a. To conserve open land, including, but not limited to areas containing unique or environmentallysensitive natural or cultural resources such as stream corridors, wetlands, wildlife habitats, woodlands, existing and future water supplies, scenic areas and significant archaeological sites, by setting them aside from development;

   b. To implement the Comprehensive Plan, including the Open Space Plan, to create a Royal River Corridor[1] and other conservation networks for the benefit of present and future residents;

   c. To provide for the conservation and maintenance of open land for active or passive recreational use;

[1] The Royal River Corridor includes the Royal River, Chandler Brook and the East Branch, and at least 500 feet on both sides of these water bodies.

d. To provide greater design flexibility and efficiency in siting of services and infrastructure, including reductions in the length of roads and utility runs, and the amount of paving required for development;

e. To provide for a diversity of lot sizes, building densities and housing choices to accommodate a variety of age and income groups, and residential preferences;

f. To create neighborhoods with direct visual access to open land, with amenities in the form of neighborhood open space, and with a strong neighborhood identity.

g. To conserve scenic views and elements of the town's rural character, and to minimize perceiveddensity, by minimizing views of new development from existing public roads.

2. To achieve these purposes, the Planning Board may approve clustered housing development and open space development in accordance with the provisions of this section. In approving any subdivision in any district, the Planning Board may approve clustered housing development where lot sizes, lot widths, lot coverage, street frontages and building setbacks can be reduced below the minimum requirements of Section VII. Zoning District Regulations, and any land gained thereby is set aside as open space. Clustered housing development is optional in the growth districts and mandatory in the rural districts2. In approving subdivisions, the Planning Board may also approve open space development in the rural districts as an alternative to clustered housing development. Open space development requires very low residential densities and permanent preservation of designated high value open space.

B. **Applicability:** This section is applicable to the development of residential subdivisions, as follows:

1. **Farm and Forest District, Residential Shoreland District and Resource Protection District**: Clustered Housing Development or Open Space Development and the provisions of this section shall be **mandatory** for all residential subdivisions located within the Farm and Forest District, theResidential Shoreland District and the Resource Protection District.
Waivers: The Planning Board may waive the mandatory Clustered Housing Development or Open Space Development requirement under the following conditions:

a. For minor subdivisions of less than five (5) lots where the applicant demonstrates that there will be minimal benefits in keeping with the purposes of Section 11.3, and where the development does not provide an opportunity to enhance the Royal River Corridor, Pratt's Brook, Toddy Brook or Deer Brook corridors, open space associated with Knight's Pond or existing and futurepublic water supplies.

b. For subdivisions within and/or adjacent to the Royal River Corridor, when a developer or landowner demonstrates to the Planning Board the following:

1) The property was a lot of record[3] at the time of the adoption (June 14, 2005) of this provision (Section 11.3.B.1.b), and the developer was the owner of the property at the time of the adoption of this provision;

[1] Growth Districts include the Village Center District and Village Residential District.
[2] Rural Districts include the Farm and Forest District, Residential Shoreland District and Resource Protection District.
[3] Definition: "Lot of Record: At lot that exists as shown or described on a plat or deed in the records of the Cumberland County Registry of Deeds."

2) The mandatory Clustered Housing Development or Open Space Development requirement would result in a significant loss of otherwise buildable lots under the other provisions of Section 11.3.B.1. A significant loss of otherwise buildable lots is defined as the loss of more than 30 percent of the total number of buildable lots due to the prohibition against new residences within subdivisions within the Royal River Corridor area between two hundred (250) feet from the normal high water mark of the Royal River, Chandler Brook or the East Branch and five hundred (500) feet from the high water mark of these water bodies; and

3) The developer and/or landowner calculates the number of buildable lots lost as a result of Section 11.3.B.1 and obtains subdivision approval for a plan that meets the other criteria of this Ordinance and the Subdivision provisions prior to January 1, 2010.

4) **Sunset Clause:** Section 11.3.B.1.b will terminate on January 1, 2010.

c. In all cases, waivers shall only be granted in accordance with subsections B.1.a and B.1.b, above. The Planning Board shall assure preservation of high value open space in keeping with the goals of the Royal River Corridor Overlay District to the greatest extent practical. In granting the waiver the Planning Board may allow smaller lot sizes and/or allow for limited residential development within the area between two hundred (250) feet from the normal high water mark of the Royal River, Chandler Brook or the East Branch and five hundred (500) feet from the high water mark of these water bodies.

2. **Village Center District and Village Residential District:** The provisions of this section shall be **optional** in the Village Center District and Village Residential District. Applicants shall be encouraged to utilize cluster housing development when these designs can be shown to increasehousing affordability and/or enhance neighborhood cohesion, aesthetics, open space and recreational amenities.

a. When a subdivision application/sketch plan does not propose clustered development, the Planning Board may, in its discretion, ask the applicant to submit an alternative sketch plan showing a clustered housing development.

b. If the Planning Board, after a site walk and after such consultation with appropriate agencies or non-profits as the Planning Board deems appropriate, concludes that the parcelshown on the alternative sketch plan contains open fields, pasture, wetlands, waterways, wildlife habitat, scenic vistas, historic and/or archeological assets, rare flora or fauna or notable stands of forest, any of which could be preserved by clustering, the Planning Board may request that the applicant revise the application and propose a clustered housing development.

c. A request under paragraph (b) above will not bind the applicant; but if the applicant decides not to propose a clustered housing development, the Planning Board may consider the absence ofclustering when it determines if the application meets the review criteria of Section V. Subdivision Review Procedures and Criteria.

C. **General Standards for Clustered Housing Development and Open Space Development**:

1. Developments proposed under the terms of this section shall meet all the requirements for a subdivision, *Section VIII Section 8.4 Design and Constructions Standards for Roads and Driveways*, and all other applicable town ordinances including the general performance standards of this Ordinance, unless otherwise noted.

2. Each lot or building must be an element of an overall plan for site development. When the

development consists of the creation of lots, the plan shall establish a building envelop for each lotthat identifies the area within which the buildings will be located. When the development involves the construction of multiple buildings on one or more lots, the plan shall show the location of eachbuilding.

3. Developments shall be designed to preserve valuable open space consistent with the town's OpenSpace Plan, and any other areas worthy of conservation as established through the sketch plan process. No dwelling units, structures associated with dwelling units, or uses accessory to a dwelling unit shall extend into the required minimum protected open space. Open space shall be generally contiguous, and shall be designed to connect with valuable open space or conservationland on adjacent properties to the greatest extent possible. The creation of open space networks and expanses of conservation land to provide wildlife habitat and corridors, to provide land for futuretrail systems and passive recreation land, and to protect other cultural and natural resources is required. The addition of open space and conservation land to the Royal River Corridor including the Royal River, Chandler Brook and the East Branch, and Pratt's Brook, ToddyBrook, Deer Brook including the Deer Brook wetland, and Knight's Pond, areas that will add to protection for existing and future public water supplies are high priorities. The Planning Board mayrequire public access to open space areas, unless the open space is an environmentally sensitivearea where public access would be detrimental. There must be a demonstrated need for the publicaccess, such as access to a water body, access to a trail system or the need for passive open space for recreation within the area.

4. Where a development abuts a water body, a portion of the land along the water shall be useable for passive recreation. This open space land shall have a minimum depth of five hundred (500) feet for areas abutting the Royal River, Chandler Brook and/or the East Branch. This open space land shall havea minimum depth of one hundred fifty (150) feet for areas abutting Pratt's Brook, Toddy Brook, Deer Brook, the DeerBrook wetland and Knight's Pond. The minimum depth requirement of 500 feet for areas abutting the Royal River, Chandler Brook and/or the East Branch may be reduced to two hundred fifty (250) feet only in accordance with Section 11.3.B.1, above.

5. Notwithstanding the provisions of Section VII. Zoning District Regulations relating to minimum lot size, street frontage and setbacks, and maximum lot coverage, the Planning Board, in reviewing proposed clustered housing developments and open space development may modify said provisions relating to minimum lot size, street frontage, setback, and lot coverage to permit innovative approaches to development and environmental design in accordance with the standards of this section. The Planning Board may reduce lot frontage and front setback requirements as wellas reduce side and rear setbacks without percentage limitation. The Planning Board may reduce lot area requirements, but only if a net residential acreage at least equal in area to the cumulative lot size reduction is maintained as common or public land. The modification of these standards shall not require a variance and no finding of undue hardship shall be required.

6. In the **Farm and Forest District, Residential Shoreland District and Resource Protection District**, the following shall apply:

   a. The maximum residential density for clustered housing development shall be one (1) residential unit per three (3) net residential acres.

   b. The maximum residential density for open space development shall be (1) residential unit per ten (10) net residential acres.

   c. The total area of permanently preserved open space within clustered housing developments and open space developments shall be a minimum of fifty percent (50%) of the total area of the parcel.The Planning Board may <u>not</u> waive the minimum open space requirements.

d. No individual lots shall have direct driveway access to Routes 231, 115 or 9, or North Road.

e. No individual lots shall have direct driveway access to any other public road, which existed priorto the time of the development, unless the applicant demonstrates to the Planning Board's satisfaction that there is a unique situation where the configuration of the parcel and an environmental constraint, such as a high value wetland, prohibits driveway access to an internalsubdivision road, or is preferable to impacting the high value wetland.

7. In the **Village Center District and Village Residential District**, the following shall apply: [Amended 06/16/12]

   a. Clustered housing development shall be a minimum of five (5) lots or five (5) residential units.

   b. The Planning Board may grant a density bonus of twenty percent (20%) for clustered housing developmentthat provides useable public open space for recreation pursuant to Section 10-22 Recreation and Open Space Land in Developments, protects high value scenic vistas as identified in the Comprehensive Plan, and/or provides affordable housing pursuant to the provisions of Section 11.2 Affordable Housing.

   c. No individual lots shall have direct driveway access to routes 9, 231, 115 or North Road.

8. All sewage disposal systems shall meet the requirements of Section 10.16. Sewage Disposal andSection 10.23. Water Supply. [Amended 06/16/12]

9. **Minimum Lot Area Requirements:** [Amended 06/16/12]
   a. The minimum lot area requirement may be reduced to twenty thousand (20,000) square feet under either of the following conditions:

      1) When the lot is served by public sewer, or

      2) When the lot is served by an advanced wastewater treatment system where a hydrogeological assessment pursuant to Section 10.24. Water Quality, has demonstrated that water quality will not be degraded.

   b. The minimum lot area requirement may be reduced to ten thousand (10,000) square feet when both public water and public sewer serve the lot.

10. The Planning Board may reject a proposed Clustered Housing Development or Open Space Development that does not permanently preserve a sufficient amount of open space, or permanently preserve high value open space areas as identified in the Comprehensive Plan and Open Space Plan. [Amended 06/16/12]

11. There shall be no further subdivision of lots within clustered housing developments or open spacedevelopments located in the Farm and Forest District, Residential Shoreland District, or Resource Protection District. The Planning Board may require that there be no further subdivision of lots within clustered housing developments within the Village Residential District and/or Village CenterDistrict, to maintain the long-term integrity of the development in meeting the intent and purposes of the Clustered Housing provisions and this Ordinance. [Amended 06/16/12]

D. **Other Siting Standards**:

1. Buildings shall be oriented with respect to scenic vistas, natural landscape features, topography, south-facing slopes (where possible) and natural drainage areas, in accordance with an overall plan for site development and landscaping.

2. Buildings shall be located within forested portions of the development and not in open fields. Whenthe development contains no forest, or insufficient forestland to include all buildings, the development shall be designed to minimize views of buildings that will be visible from existing publicstreets. When a development contains a scenic ridgeline, buildings should be placed fifty (50) feet verticaldistance below the ridgeline and tree removal should be limited. Restrictions minimizing views of buildings shall be included on the plat and in the deed to each lot.

3. Buildings shall be designed and laid out to protect bedroom windows from light invasions by vehicleheadlights or glare from existing outdoor lighting or illuminated signs where allowed, insofar as practical.

4. Where parking spaces or storage areas are located in areas abutting existing residential properties,a permanent wood or masonry screen at least four (4) feet high shall be erected along the property line in addition to the green perimeter strip described below.

5. Other than in the Resource Protection District, a green perimeter strip not less than twenty (20) feet wide shall be maintained with grass, bushes, flowers, or tress along all lot lines (except for entrance and exit driveways). Such green strip shall not be built on or paved or used for parking or storage. There shall be no removal of trees over four (4) inches in diameter within this buffer. In the Resource Protection District, vegetation shall be retained in its natural state, although tree planting shall be permitted as a matter of right. Restrictions protecting this green perimeter strip shall be included on the plat and in the deed to each lot. Alternatively, such areas may be protected by a conservation easement.

E. **Dedicated Open Space Land**:

1. There shall be no further subdivision of dedicated open space. Open space land shall be used only for agriculture, forestry, conservation, and/or non-intensive public outdoor recreational activities that do not require modifications or improvements to the land other than access points or trails, including bridges for trails (such as hiking, bird watching, nature study, cross country skiing, snowmobiling and hunting). Vehicular use and hunting and trapping may be prohibited. Subsurfacesewage disposal systems, wells and easements for public utilities, but no structures, may be permitted in open space areas.

2. Open Space land set-aside in clustered housing development or open space development shall beprotected as required by this sub-section. Land set aside as protected open space may be a separate parcel. In Farm and Forest District, Residential Shoreland District and Resource Protection District developments only, such land may be included as a portion of one or more parcels on which dwellings and other structures are permitted, provided that a conservation easement is placed on such land and that the Planning Board approves the configuration of the open space land and finds that the proposed development plan will not compromise the conservation value of the open space land.

3. **Fee Simple Dedication to Town, State, the Royal River Conservation Trust or Other Conservation Organization:** Fee simple dedication of protected open space land to the town, state, Royal River Conservation Trust or another conservation organization approved by the Planning Board is an acceptable method of protection.

4. Dedication of Conservation Easement to the Royal River Conservation Trust, Town, State or Federal Agency, or Other Conservation Organization:

   a. A perpetual conservation easement restricting development may be granted to a qualified non-for-profit conservation organization or land trust, such as the Royal River Conservation Trust, the town, the state or a federal agency.

b. Such conservation easement shall be approved by the Planning Board, Town Attorney, and shall be required as a condition of approval by the Planning Board.

c. The conservation easement shall be recorded in the Cumberland County Registry of Deeds prior to or simultaneously with the filing of the final subdivision or site plan. In the case of minor site plans, a deed restriction enforceable by the town may be substituted for a conservation easement.

d. The conservation easement may permit only those uses authorized through the development review process.

5. **Deed Restrictions:** As a last resort in the event that a conservation easement is not accepted by the third party or by the town, a deed restriction shall be required of the applicant, which shall meet the requirements of these provisions.

6. **Private Ownership of Open Space Land**:

   a. In the **Farm and Forest District, Residential Shoreland District and Resource Protection District**, open space land may be owned by private landowner(s) including individuals, families, partnerships, trusts, non-profit organizations, home/property owner's association or governmental entity, as long as it is protected from development by conservation easement. The open space land may occur on one or several lots, depending on the preferences of the applicant.

   b. In the **Village Center District and Village Residential District**, open space land shall be set-aside in one or more parks, greens, or other recreational open space land areas owned by a home/property owner's association or at the owner's option, dedicated to the Friends of the Royal River, the town or an other conservation or governmental entity. A conservation easement may be required depending upon the environmental, aesthetic, recreational, cultural or historic significance of the land.

   c. If any of the open space and/or facilities are to be reserved by the individual unit owners as common open space, each unit owner shall own a fractional interest in the common open space and the developer shall be required prior to final subdivision plan approval to incorporate a homeowners' association consisting of the individual unit owners, which incorporation must comply with Section 11.09 Home Owner/Property Owners' Associations.

7. **Management and Monitoring Plan of Open Space Land**:
   a. Unless otherwise agreed to by the Planning Board, the cost and responsibility of managing and monitoring dedicated open space shall be borne by the developer, property owner, homeowner's association, Friends of the Royal River, and/or other conservation organization approved by the Planning Board.

   b. The applicant shall, at the time of the preliminary plan submission, provide a Management and Monitoring Plan for the dedicated open space that has been approved by the entity that will be responsible for implementing the Management and Monitoring Plan.

   c. The applicant may be required to contribute sufficient funds for the maintenance and monitoring of the dedicated open space.

   d. In the event that the entity established to maintain and monitor the dedicated open space land, or any successor thereto, fails to maintain all or any portion thereof in reasonable order and condition, the town may assume responsibility for maintenance. The town may enter the premises and take corrective action, and the costs of such corrective action may be charged to the entity responsible for the management and monitoring of the open space land.

SECTION 11.4 HOME OCCUPATIONS

A. **Purpose:** The purpose of these provisions is to allow home occupations to locate throughout the townwith minimal regulation provided they meet the following standards.

B. **Applicability:** Refer to Section 12 Definitions for a specific definition of a home occupation. The following standards apply to all home occupations in the town.

C. **Requirements:** Home occupations must conform to the following standards:

1. The home occupation is owned and operated by a member or members of the family residing within the dwelling unit. Not more than one person outside the family residing within the dwelling unit shall be employed at the location of the home occupation.
2. The occupation or profession shall be carried on wholly within the principal building or within a building or other structure accessory thereto.
3. The occupation is clearly incidental, compatible and secondary to the residential use of the dwelling unit.

4. There shall be no exterior storage of materials that would be visible from a public road or an abutter's dwelling, and no other exterior indication of the home occupation or variation from the residential character of the principal building shall be allowed. Any exterior storage of materials shall meet the minimum setback requirements set forth in Table 7.2 Space and Dimensional Requirements.

5. All signs shall be in accordance with Section 8.7 Signs.

6. Lighting in and around the dwelling and any outbuildings must be consistent with the exterior lighting for a residential dwelling.

7. The home occupation may utilize:

    a. Unfinished attic and basement spaces.

    b. One accessory structure.

    c. The floor area utilized for the home occupation shall not exceed fifty percent (50%) of the total floorarea of the dwelling unit.

8. No traffic shall be generated by such home occupation that would be in greater volumes than wouldnormally be expected in the neighborhood or generate more than forty (40) vehicle trips per day. The traffic generated by such home occupation shall not increase the volume of traffic so as to create a traffic hazard or disturb the residential character of the immediate neighborhood. In addition to the off-street parking provided to meet the normal requirements of the dwelling, adequate off-streetparking shall be provided for the vehicles of each employee and the vehicles of the maximum number of users the home occupation may attract during peak operating hours.

9. Hours of operation shall be reasonable and normal for a residential area. If the normal business hours of operation are proposed to go beyond the hours of 5:00 a.m. to 8:00 p.m. then a conditional use permit shall be approved by the Planning Board and the standards set forth in subsection 13 below shall be the review criteria.

10. No nuisances, offensive noise, vibration, smoke, dust, electrical disturbance, odors, heat or

glare shall be detectable at objectionable or unreasonable levels beyond the property limits.

SECTION 11.5 MANUFACTURED HOUSING ON INDIVIDUAL LOTS

A. **Purpose:** To allow manufactured housing as defined and allowed under this Ordinance to be placed orerected on individual house lots on undeveloped lots where single family dwellings are allowed. The review of manufactured housing shall also be pursuant to Section VII. Zoning District Regulations. Manufactured housing shall meet the following design standards:

B. **Standards and Requirements**:

1. The wheels, axle and tongue shall be removed and the unit shall be placed on a permanent foundation containing, at a minimum, a four (4) foot masonry frost wall completely surrounding the perimeter of the unit.

2. The roof pitch shall be at least one to four (1:4). Roof shingles shall be either asphalt compositionshingles or approved wood shingles or shakes.

3. Exterior wall surfaces shall be covered with materials similar to residential, site built dwellings. Theymay include clapboards, simulated clapboards such as conventional vinyl or metal siding, wood shingles or smooth, ribbed or corrugated metal or plastic panels, except as permitted above.

4. The minimum horizontal dimension of the unit as installed on the site is fourteen (14) feet. The minimum floorarea of the unit shall be seven hundred fifty (750) square feet.

5. The unit shall be sited on the lot so that it is within thirty (30) degrees of being parallel to the front propertyline of the lot (or the chord connecting the two points where the side lot lines meet the front line if the property line is curved). This requirement shall not apply if the width of the front building facing,including the unit and any permanently attached additions, is more than twenty-four (24) feet or if the unit is setback two hundred fifty (250) feet or more from the nearest street.

SECTION 11.6 MOBILE HOME PARKS [AMENDED 6/19/21]

A. **Purpose:** To provide review standards, performance standards and areas within the town of North Yarmouth where mobile home parks may be located in compliance with Title 30 M.R.S., Section 4358, as amended. The review of mobile parks shall also be pursuant to Section VII. Zoning District Regulations.

B. **Standards and Requirements**:

1. Except as expressly stipulated in this Ordinance to the contrary, manufactured housing parks shallmeet all the requirements for residential subdivision review, approval and performance standards,and shall conform to all applicable state laws and local ordinances and regulations.

2. **Overall Size:** Manufactured Housing Parks shall not be less than twenty (20) acres in size.

3. **Lot Size, Width and Density:** Lot area, lot width and design standards notwithstanding the dimensional requirements for other uses, lots in a mobile home park shall meet the following lot area and lot width requirements:

   a. Lots served by Public Sewer
      Minimum Lot Area – 6,500 square feet
      Minimum Lot Width – 50 feet

   b. Lots served by individual subsurface wastewater disposal systems:

Minimum Lot Area – 20,000 square feet
Minimum Lot Width – 100 feet

c. Lots served by a central subsurface wastewater disposal system approved by Maine Department of Human Services:
Minimum Lot Area – 12,000 square feet
Minimum Lot Width – 75 feet

d. The overall density of any park served by any subsurface wastewater disposal system shall notexceed one dwelling unit per twenty thousand (20,000) square feet of total park area.

e. Where lots front on a curved right-of-way or a reserved by a driveway, the frontage requirementshall be measured in a straight line perpendicular to the setback line.

f. Where applicable and to the extent not inconsistent with state law, the design standards of Section 11.5. Manufactured Housing on Individual Lots shall apply.

g. The overall density of the mobile home park shall be the combined area of its mobile home lotsplus the area required for road rights-of-way; the area required for buffer strips; for areas servedby public sewer, an open space area for storage and recreation equal to ten percent (10%) of the combined area of the individual lots; and the area within the shoreland setback.

4. **Setback Requirements:** Mobile homes in a mobile home park but adjacent to a public road shall be set back from the public road a distance equal to the setback requirement for other residential developments. No mobile home park lot shall have direct vehicular access onto a public road.

5. **Buffer Strips**:

a. A fifty (50) foot wide buffer strip shall be provided along all property boundaries that:

1) Abut developed residential land which has a gross density of less than half of that proposedin the park, or

2) Abut undeveloped residential land that is zoned at a density of less than half of thatproposed in the park.

Further, no structures, streets or utilities shall be placed in the buffer strip except that utilities may cross a buffer strip to provide services to the park.

b. Within twenty-five (25) feet any property line and within the buffer strip, measured from the exterior boundaryof the park, visual screening and/or landscaping shall be provided. The visual screening may consist of fences, beams, landscaping (such as shrubs and trees) and natural existing vegetation. This screening shall effectively screen at least 80 percent of the homes from the adjacent property and shall be maintained throughout the life of the project.

6. **Open Space:** Mobile home parks served by a public sewer, an area amounting to no less than 10percent of the total area devoted to individual lots shall be set aside for open space and/or recreation, if required by the Planning Board. Such space shall be accessible to and useable by all residents of the park. Parking spaces, driveways and streets and buffer areas are not considered useable open space, but community recreation buildings, pools and courts are considered as openspace. To the maximum extent possible, undeveloped open space shall be left in its natural state.Improvements to make trails for walking and jogging or to make picnic areas are permitted. The developer shall submit, as part of the application, a copy of that portion of the proposed park rulesand a plan that specifies how the open spaces are to be used and maintained and what conditionsare to apply to its use. The plan shall specify the areas to be

dedicated to open space, recreation,and storage.

7. **Road Standards**:
   a. Roads within mobile home parks that are to be offered for acceptances to the community shallmeet the minimum road standards of the town of North Yarmouth.

   b. Privately owned roads within the mobile home park shall be designed by a Maine registered professional engineer, and shall be built according to the requirements described below. Where the road standards promulgated by the State Manufactured Housing Board and adopted by theLegislature of the State of Maine conflict with the standards described below, the ManufacturedHousing Board's standards shall apply.

   c. The street system of a mobile home park shall intersect with a public street.

   d. Any mobile home park expected to generate average daily traffic of two hundred (200) trips per day or more,or which is designated to contain greater than twenty-five (25) lots, shall have at least two (2) street connections with existing public streets. Any street within park with an average daily traffic of two hundred (200) trips per day or more, shall have at least two (2) street connections leading to existing public streets, other streets within the park, or other streets shown on an approved subdivision plan.

   e. The intersection of any street within a park and an existing public street shall meet the followingstandards:

      1) Angle of intersection: The desired angle of intersection shall be ninety (90) degrees. The minimumangle of intersection shall be seventy-five (75) degrees.

      2) Maximum Grade within seventy-five (75) feet of intersection: The maximum permissible grade within seventy-five (75) feet of the intersection shall be two percent (2%).

   f. Mobile home lots shall have vehicular access only to an interior road created for the mobile home park.

   g. Right of Way and Pavement Width:

      1) Park roads shall have a minimum right of way of twenty-three (23) feet and the Planning Board may requirea minimum paved surface of 20 feet. The minimum paved width of a one-way road shall be fourteen (14) feet. On street parking shall be prohibited along fourteen (14) foot, one-way streets and twenty (20) foot two-lane streets.

      2) Parking lanes shall be a minimum of 8 feet in width, if provided.

      3) Cul-de-sac turn-arounds shall have a minimum radius of one hundred (100) feet at the outer edge of the pavement, exclusive of any parking areas.

   h. Minimum Sight Distance: A minimum sight distance of ten (10) feet for every mile per hour of postedspeed limit on the existing road shall be provided. Sight distances shall be measured from thedriver's seat of a vehicle that is ten (10) feet behind the curb or edge of shoulder line with the heightof the eye three and a half (3½) feet above the pavement and the height of object four and a quarter (4¼)feet.

   i. Distance From Other Intersections: The centerline of any street within a park intersecting an existing public street shall be no less than one hundred twenty-five (125) feet from the centerline of any other street intersecting that public street.

   j. Parking Requirements: For each mobile home lot there shall be provided and maintained at

least two (2) off street parking spaces.

In addition to occupant parking, off street guest and service parking shall be provided within theboundaries of the park at a ratio of one space for each four (4) mobile home lots. Such parking spacesshall be reserved for that sole use. The Planning Board may waive this requirement if a parkinglane is provided and will accommodate all required spaces.

8. **Utility Requirements:** All mobile home parks shall provide permanent electrical, water and sewagedisposal connections to each mobile home in accordance with applicable state and local rules andregulations.

9. **Sidewalks/Walkways:** The mobile home park shall contain pedestrian walkways between all unitsand all service and recreational facilities. Such walkways shall be adequately surfaced and lit. A portion of the road surface may be reserved for walkways provided the roadway width is widened accordingly. Walkways shall be a minimum width of three (3) feet.

10. **Lighting:** Outdoor lighting shall be provided to adequately illuminate internal streets and pedestrianwalkways.

11. **Signs:** Signs shall meet the requirements of Section 8.7. Signs.

12. **Storage:** At least three hundred (300) cubic feet of enclosed tenant storage facilities shall be conveniently provided near or on each mobile home lot for the storage of materials and equipment.

13. **Storm Drainage:** A storm drainage plan shall be prepared by a Maine registered professional engineer showing ditching, culverts, storm drains, easements, and other proposed improvements sufficient to accommodate a 25 -year storm.

14. **Groundwater**:

    a. Application: For mobile home parks not served by a public sewer, the application shall include an assessment of the impacts of park development on groundwater quality. The persons developing or expanding a mobile home park have the burden of proving that the development will not pollute a public or private water supply or aquifer. The assessment shall be prepared by a Maine certified geologist or Maine registered professional engineer and shall include thefollowing:

        1) A map showing the basic soil types;

        2) The depth to the water table at representative points throughout the mobile home park;

        3) Drainage conditions throughout the mobile home park;

        4) Data on the existing groundwater quality, either from test wells in the mobile home park orfrom existing wells on neighboring properties;

        5) An analysis and evaluation of the effect of the mobile home park on groundwater resources.The evaluation shall, at a minimum, include a projection of post development nitrate- nitrogen concentrations and any other identified chemicals of concern at any wells within the mobile home park, at the mobile home park boundaries and at a distance of one thousand (1,000) feetfrom potential contamination sources. For mobile home parks within the watershed of a lake, projections of the development's impact on groundwater phosphateconcentrations shall also be provided;

6) A map showing the location of any subsurface wastewater disposal systems and drinking water wells within the mobile home park and within two hundred (200) feet of the mobile home park boundaries;

b. **Standards for Acceptable Groundwater Impacts**:

1) Projections of groundwater quality shall be based on the assumption of drought conditions(assuming 60 percent of annual average precipitation).

2) No mobile home park shall increase any contaminant concentration in the groundwater to more than one half of the Primary Drinking Water Standards adopted by the State of Maine Department of Human Services. No mobile home park shall increase any contaminant concentration in the groundwater to more than Secondary Drinking Water Standards.

3) If groundwater contains contaminants in excess of the primary standards, and the mobile home park is to be served by on-site groundwater supplies, the applicant shall demonstratehow water quality will be improved or treated.

4) If groundwater contains contaminants in excess of the secondary standards, the mobile home park shall not cause the concentration of the parameters in question to exceed one hundred fifty (150) percent of the ambient concentration.

c. **Development:** Subsurface wastewater disposal systems and drinking water wells shall be constructed as shown on the map submitted with the assessment. If construction standards fordrinking water wells are recommended in the assessment, those standards shall be included as a note on the plan.

15. **Permitted Accessory Uses**:

a. Park Management Office;

b. Community or recreation buildings or structures within the park provided for use by park residents;

c. Laundry building provided for use by residents only;

d. Service equipment building for storage of park maintenance equipmentonly;

e. Storage facilities for use by park residents only.

16. **Park Administration:** The owner and operator of a mobile home park shall be responsible for ensuring the maintenance of all structures and their sites. Park management shall conform to statelaws. Compliance with this Ordinance shall not exempt the park owner, developer, or manager fromcomplying with other applicable local, state and federal codes and regulations. The owner and operator may be required to establish to the Planning Board as part of the mobile home park reviewand approval process that the owner and operator are financially and technically capable, and the Planning Board may require any reasonable performance guarantees allowed under Section 3.8.Performance Guarantees.

17. **Conversion of Park:** No development or subdivision which is approved under this section as a mobile home park may be converted to another use without the approval of the Planning Board, and meeting the appropriate lot size, lot width, setback and other requirements. The plan to be recorded at the Cumberland County Registry of Deeds and filed with the town shall include the following restrictions as well as any other notes or conditions of approval.

a. The land within the park shall remain in a unified ownership and the fee to lots or portions oflots shall not be transferred.

b. No dwelling unit other than a manufactured housing unit shall be located within the park.

SECTION 11.7 EXTRACTION OF EARTH MATERIALS (MINERAL EXTRACTION) [AMENDED 6/19/21]

A. **Applicability:** The following provisions apply to the excavation, processing, and/or storage of more than 1,000 cubic yards of soil, topsoil, loam, sand, gravel, clay, rock, peat, or other like material from its natural location within any twelve (12) month period. Associated activities, such as the reclamation of the extraction site and the transportation of the above stated materials away from the extraction site are also part of the regulated activity. All commercial operations over one thousand (1,000) cubic yards per twelve (12) month period requirereview and permitting by the Maine State Department of Environmental Protection (DEP). Mineral extraction and/or mineral exploration shall require review pursuant to Section VII. Zoning District Regulations.

See also Section 9.1 Residential Shoreland District and Resource Protection District PerformanceStandards, and Section 9.2 Groundwater Protection Overlay District: Best Management Practices,as applicable.

B. **Application Procedure:** Applications shall be accompanied by a plan prepared according to the performance standards and submission requirements of this Ordinance. In addition to the applicable requirements of Section IV. Site Plan Review and Conditional Use Procedures, the plans shall indicate thefollowing: the location of the extraction site/processing/storage site; the property lines and names of abutting landowners and public and private ways; the location of top bank and slope grades, existing and as proposed upon completion of the operation; and details on proposed fencing, buffer strips, signs, lighting, parking and loading areas, entrances and exists. A written statement shall be submitted of the proposed method, regularity, working hours, total proposed land area to be excavated, the volume of material to be removed and plans for the rehabilitation and restoration of the site upon completion of the operation. The Planning Board may also require submission of a hydrogeologic assessment to determinethe effects of the proposed activity on groundwater movements and quality within the general area. (Note: new mineral extraction operations are prohibited in the Groundwater Protection Overlay District). The Yarmouth Water District will be notified of any reclamation of mineral extraction operations within the Groundwater Overlay District.

C. **Standards**:

1. **Buffer Area Required:** The operation shall be shielded from surrounding property by an adequatebuffer area of not less than two hundred (200) feet from the top of the final grade to the property line, except thatthe permitting authority/Planning Board may reduce the buffer area from the minimum requirementof two hundred (200) feet to a minimum of not less than one hundred (100) feet provided that any excavated property remainingwill be left in a condition more useful for some future purpose conforming to the district requirementsin which the excavation site is located. Natural vegetation shall be undisturbed and maintained in buffer areas.

2. Specific plans shall be established to avoid hazards from excessive slopes and/or standing water.In no case may soils be removed or excavated to closer than within five (5) feet of the seasonal high-water table as may be determined by a competent authority. Where an embankment must be left upon the completion of operations, it shall be at a slope of not steeper than one foot vertical to three (3) feet horizontal, except that where the required buffer area has been reduced to one hundred (100) feet the slopeof the edge of the excavation area shall not exceed one foot vertical to four (4) feet horizontal. No standingwater shall be allowed to remain longer than two (2) consecutive calendar weeks unless specifically provided for by the permitting authority.

3. In the case of any excavation to a depth of more than twenty (20) feet below the surface there shall be constructed a substantial fence with suitable gates completely enclosing the property or area in which the excavation is located. No portion of such fence shall be located closer than forty (40) feet to theedge of such excavation. However, this condition shall not apply in the case of an excavation or removal of lands adding slope of one foot vertical to greater than three (3) feethorizontal.

4. No excavation shall be extended below the grade of adjacent streets unless a two hundred (200) foot buffer stripshall be provided from the edge of the right-of–way except in cases where a specific condition hasbeen made with the consent of the permitting authority and other involved parties such as, the North Yarmouth Road Commissioner, Maine Department of Transportation and other propertyowners, for the reconstruction of the right-of-way and street at a different level.

5. Provisions shall be made for the control of storm water runoff to prevent on-site erosion, and to ensure that storm water runoff leaves the site at the same location and is not significantly increased.

6. **Reclamation:** Only clean non-polluting fill (no non-natural odors, non staining, and not originatingat a known spill site) may be used for filling depressions or raising the ground level. Sufficient topsoilshall be retained on the site or otherwise provided sufficient to cover all disturbed areas with an average depth of not less than two (2) inches. All disturbed areas resulting from the excavation and removal of lands or soils shall be graded and sloped to conform to the provisions of this Ordinance,reloamed and seeded with grasses indigenous to the area and such trees as the permitting authority may require and otherwise restore to a natural condition. In the case of topsoil removal,the upper six (6) inches of topsoil shall be stockpiled and restored to a depth of 6 inches throughout thesite. The Planning Board may require that the applicant submit a written recommendation from the Cumberland County Soil and Water Conservation District for the quantities and type a vegetative cover, fertilizer and lime. Erosion and temporary sedimentation control measures shall be employedas specified in Section 10-6. Erosion and Sedimentation Control.

7. Loaded vehicles shall be suitably covered to prevent dust and contents from spilling or blowing from the load.

8. All access roads leading from the extraction site to public ways shall be treated with stone or othersuitable materials to reduce mud and dust.

9. If construction equipment is stored, maintained, or fueled on site, a Spill Prevention, Control and Containment Plan must be submitted. Any refueling area must be secured from contamination of groundwater by an impervious layer designed by a registered professional engineer.

10. The Planning Board may also impose reasonable permit conditions to safeguard the neighborhoodand the town, which may include but are not limited to, the following: methods of removal or processing; days and hours of operation; type and location of temporary structures; routes for transporting materials; area and depth of excavations; provision for temporary drainage; disposition of stumps, brush and boulders; and cleaning and repair and/or resurfacing of roads used in removal activity which have been adversely affected by saidactivity.

11. **Performance Guarantee:** A surety bond or performance guarantee shall be posted with the TownTreasurer by the applicant in an amount and form approved by the permitting authority with the advice of the Select Board sufficient to guarantee performance and conformity with the provisions ofthis Ordinance and approval of the permit for the excavation and removal oflands.

D. **Existing Operations:** All operations, in existence on June 14, 2005, and involving the excavation, processing and/or storage of more than one thousand (1,000) cubic yards of soil, topsoil, loam, sand, gravel, clay, rock, peat, or other like material from its natural location within any twelve (12) month period may continue, but shall obtain a permit in accordance with this Ordinance by January 1, 2007. After this date, these operations shall be deemed unlawful and subject to the full penalties provided by this Ordinance for operating withouta permit. In granting a permit for these operations the permitting authority may modify the requirements pursuant to subsection C., when the applicant demonstrates to the Planning Board that there will not be negative impacts to groundwater and other natural resource, public safety or to neighboring properties. The applicant must re-apply for waivers with every permit renewal. Waivers shall not allow existing operations to become more non-conforming.

SECTION 11.8 WIRELESS COMMUNICATIONS FACILITIES [AMENDED 6/19/21]

A. **Applicability and Purpose:** This section is designed and intended to balance the interests of the residents of the town of North Yarmouth and wireless communications providers and customers in the siting of wireless communications facilities within the town. These standards are also intended to minimizethe adverse impacts of such facilities, including visual impacts, environmental impacts, impacts tohistorically significant areas, and safety impacts. The review of wireless communications facilities shall also be pursuant to Section VII. Zoning District Regulations.

B. **Exemptions:** The following wireless communication facilities are exempt from these regulations:

1. One operated solely by a federally licensed amateur radio operator as part of the Amateur Radio Service ("ham" radio operator), with a maximum tower height of seventy-five (75) feet, and which is not additionally licensed or used for any commercial purpose, other than by the licensed amateur radiooperator.

2. One used solely for single channel business communications, such as pagers and two-way radios,with a maximum tower height of seventy-five (75) feet.

3. One solely for municipal, public safety, or public works use, with a maximum tower height of one hundred (100) feet.

C. **Space and Bulk Standards**:

1. **Tower Height:** Towers shall not exceed a height of one hundred (100) feet, except that where evidence of acceptable design and co-location is provided, the Planning Board may approve an additional twenty-five (25) feet of tower height per each additional wireless communication service co-locator, not to exceed a maximum tower height of one hundred fifty (150) feet.

2. **Antennas**:

a. **Height:** Installing antennas on alternative tower structures is permitted, provided the resulting alternative tower structure height does not exceed a maximum height of one hundred fifty (150) feet. In the VillageCenter District the maximum height shall be the highest point of a building or structure

b. **Mounting and dimensions:** The mass and dimensions of antennas on a tower or alternative tower structure shall be governed by the following criteria:

1) Whip antennas shall not exceed twenty (20) feet in length for an individual antenna, and shall be limited to two per mount, with no more than three mounts at a given level.

2) Microwave dish antennas: The aggregate diameters of microwave dish antennas mountedwithin a twenty (20) feet vertical section of a tower may not exceed twenty-four

(24) feet, with no single dish beingmore than eight (8) feet in diameter and 5 feet in depth, unless otherwise required per the path reliability and/or tower structural studies.

3) Panel antennas: The horizontal centerline of all panel antennas of a single carrier must bealigned in the same horizontal plane, with each antenna not to exceed eight (8) feet in length nor two (2) feet in width.

1. **Lot area:** A new wireless telecommunications tower shall not be constructed on a lot that does not conform to the minimum lot area required in the zoning district even if such lot is a lawful non-conforming lot of record.

2. **Setbacks**:

   a. The center of the base of any telecommunications tower must be setback a distance of at least one hundred (100) percent of the height of the tower to any property line, or the required minimum setback ofthe District in which it is located, whichever is greater.

   b. Equipment facilities shall meet the required District setback.

   c. If more than one tower is proposed on a single lot or parcel, they shall be clustered as closely together as technically possible.

   d. Notwithstanding the height and setback limitations within a zoning district, in order to accommodate the co-location of an additional antenna, a tower, existing as of June 14, 2005, may be modified or rebuilt to a taller height, not to exceed a total maximum of thirty (30) feet more thanthe tower's height as of June 14, 2005, but only if that additional height will not require any lighting or obstruction painting. The additional tower height shall not require increased lot setbacks.

   e. There shall be no setback requirements for antennas mounted on alternative tower structures. The standard District setbacks shall continue to apply for alternative tower structures and equipment facilities, where applicable.

D. **Co-location Requirements**:

1. **On Existing Towers:** Applicants for Site Plan Review for a new wireless communication tower must send written notice to all other such tower and alternative tower structure owners and licensed wireless communication providers utilizing existing towers and alternative tower structures within a one (1) mile search radius of the proposed tower, stating their siting needs and/or co-location capabilities.An application for a new tower must include evidence that existing or previously approved towers and alternative tower structures within the town and search area cannot accommodate the communications equipment (antennas, cables, etc.) planned for the proposed tower. Such evidence would be documentation must be from a qualified Maine registered professional engineer.Shared use shall be conditioned on the applicant's agreement to pay a reasonable fee and costs of adapting existing facilities to the proposed use.

2. **Construction of New Towers:** A proposal to construct a new co-located communication tower taller than the maximum height permitted for a single wireless communication service must includeevidence that the tower can structurally support a minimum of three (3) antenna arrays for each anticipated co-locating entity. (See subsection C.1. Tower Height, above.) Prior to the issuance of any buildingpermits for a co-located tower in excess of the height of a single user tower, the applicant will submitto the CEO executed agreements documenting commitments to co-locate from the number of co- locators approved by the Planning Board.

E. **Interest of Telecommunication Entity:** A proposal to construct or modify a wireless communication tower must include evidence of a commitment from a duly licensed entity to utilize

the tower to provide wireless communication services. All wireless communication entities, which are contracted to locate on the tower, must join as applicants.

F. **Submissions:** In addition to all of the relevant Site Plan Review submission requirements listed in Section IV. Site Plan Review and Conditional Use Procedures, the following submissions shall be requiredunless waived by the Planning Board:

1. A report from a Maine registered professional engineer that describes the tower, the technical reasons for the tower design and the capacity of the tower, including the number(s), type(s), and volume(s) of antenna(s) that it can accommodate and the basis for the calculation of capacity.

2. Written approval by all applicable state and federal agencies, including but not limited to the FAA and FCC, including a description of any conditions or criteria for the approval, or a statement fromthe agency that no approval is required.

3. A letter of intent that commits the tower owner and his or her successors in interest to: respond in a timely, comprehensive manner to a request for information from a potential co-location applicant;negotiate in good faith for shared use by third parties that have received an FCC license or permits;allow shared use if an applicant agrees in writing to pay reasonable charges.

4. Evidence that co-location on existing or approved towers or an alternative tower structure is not possible, per Subsection D. above. If the proposed tower cannot be accommodated on an existingor approved tower site, the applicant must assess whether such tower site could be changed to accommodate the proposed tower, and generally describe the means and projected cost of shareduse of the existing or approved tower site.

5. Proof of financial capacity to build, maintain, and remove the proposed tower.

6. An inventory of all of the provider's existing and approved towers, antennas or sites within the town of North Yarmouth and locations in surrounding communities where wireless telecommunications are proposed to be utilized in conjunction with the facility proposed in the application.

7. Photos showing site vegetation, existing and adjacent structures, views of and from the proposed site, topography, and land uses on the proposed parcel and on abutting properties.

8. Landscaping plan reflecting the location of proposed screening and fencing, planting areas, proposed plantings, existing plant materials to be retained and trees or shrubs to be removed.

9. Elevation drawings, cross-sectional area or silhouette, of the facility, drawn to scale, and showing all measurements, both linear and volumetric, showing front, sides and rear of the proposed facility including all fencing, supporting system for transmission cables running between the tower and accessory structures, control panels, antennas, and existing structures and tress. Reference any design characteristics that have the effect of reducing or eliminating visualobtrusiveness.

10. Detail of the tower base or method of attachment to a structure. If the facility will be attached to anexisting building or structure, provide measurements and elevations of the structure.

11. A visual analysis, which may include photo montage, field mock up, or other techniques, which identifies the potential visual impacts, at design capacity, of the proposed facility. Consideration shall be given to views from public areas as well as from private residences. The overall analysis shall assess the cumulative impacts of the proposed facility and other existing and foreseeable communication facilities in the area, and shall identify and include all feasible mitigation measures consistent with the technological requirements of the proposed communication

service.

12. Identify any other telecommunication facilities existing or proposed on the site.

13. Details of all accessory structures including buildings, parking areas, utilities, gates, access roads,etc.

14. **Structural Requirements:** Telecommunication towers shall be designed and installed in accordance with the most current standards of the Electronic Industries Association (EIA) Structural Standards for Steel Antenna Towers and Antenna Supporting Structures. The applicant's engineershall provide documentation showing that the proposed transmission tower meets or exceeds the most current standards of the American National Standards Institute ANSI/EIA/TIA-222 for Cumberland County relative to wind and ice loads when the tower is fully loaded with antennas, transmitters, and other equipment as described in the submitted plan. For towers or antennas placed on buildings or alternative tower structures, the applicant shall also provide written certification that the building or ATS itself is structurally capable of safely supporting the tower or antennas and their accompanying equipment.

G. **Wireless Communication Facilities (WCF) Design Standards**:

1. Except where dictated by federal or state requirements, the Planning Board may require that a proposed tower be camouflaged or designed to blend with the surroundings. This may include, butis not limited to, having a galvanized finish, being painted "flat" blue gray or in a sky-tone above thetop of surrounding trees and earth-tone below treetop level.

2. Equipment facilities shall be adjacent to the tower base unless an alternative location will be less visually obtrusive or topographic considerations require an alternative location.

3. Equipment facilities shall be no taller than one story in height and shall be treated to look like a building or facility typically found in the area.

4. No obstruction painting or any lighting shall be permitted on any towers, except where dictated byfederal or state requirements. If lighting is required, the Planning Board may review the available lighting alternatives and approve the design that would cause the least disturbance to thesurrounding properties and views.

5. Manually operated or motion detecting security lighting is permitted.

6. The Planning Board may require special design of the facilities where findings of particular sensitivity are made (e.g., proximity to historic or aesthetically significant structures, views and/or community features).

7. Sufficient anti-climbing measures and other security measures preventing access to the site shall be incorporated into the facility, as needed, to reduce the potential for trespass and injury.

8. Antenna arrays: Antenna arrays located on an existing structure or alternative tower structure shallbe placed in such a manner so as to not be visible from a ground level view adjacent to the structure.If, however, circumstances do not permit such placement, the antenna array shall be placed and colored to blend into the architectural detail and coloring of the host structure.

H. **Location:** Wireless telecommunication facilities shall not be sited in areas of high visibility unless the Planning Board finds that no other location is technically feasible. If the facility is to be sited above the ridgeline it must be designed to minimize its profile by blending with the surrounding existing natural and man-made environment. No facility shall be located so as to create a significant threat to the health or survival of rare, threatened or endangered plant or animal species.

I. **Additional Standards and Criteria:** Mitigation measures shall be utilized to screen antennas and towers from view from public rights-of-way or scenic vistas, either via landscaping, fencing or other architectural screening. Creative design measures shall be employed to camouflage facilities by integratingthem with existing buildings and among other uses. Other technically feasible sites shall be investigated and, if available, the proposed facility shall be relocated in order to minimize the effect of the location on visually sensitive areas such as residential communities, historical areas and open space areas.

J. **Waiver Provision:** The Planning Board, in its sole discretion, may modify or waive any of the submission requirements, application procedures, or standards of this section, 11.9. Wireless Communication Facilities, when it determines that, because of the type or size of the project or circumstances of the site, such requirements would not be applicable or would be unnecessary to determine compliance with the approval standards. The Planning Board must additionally determine that such modification or waiver would not adversely affect properties in the vicinity or the general safety and welfare of the town. The burden of proof regarding any such modification or waiver rests solely with the applicant and must be shown to be consistent with federal and state law. Not withstanding the authority ofthe Planning Board to grant a waiver, in no instance may the height of a new tower exceed two hundred (250) feet or may the height of an alternative tower structure be increased to more than two hundred (250) feet.

K. **Amendments:** Any change to existing, previously approved and proposed towers requires site plan approval pursuant to Section VII. Zoning District Regulations. Changes include, but are not limited to, modifications to the approved height and to the approved attachments such as antennas and dishes as well as requests for additional attachments.

L. **Removal of Abandoned Wireless Communication Facility (WCF)**:

1. The owner of a WCF shall notify the CEO of the date of cessation of use of the facility or any component(s) thereof within one month from the date of such cessation. If the owner fails to give the notice required by this paragraph, the CEO shall make a determination of such date, which determination shall be conclusive.

2. Any WCF or component thereof that is not operated for a continuous period of twelve (12) months shall beconsidered abandoned. The owner of an abandoned WCF or component thereof shall remove it within ninety (90) days of receipt of notice from the CEO of determination of abandonment.

3. All above ground structures, equipment, foundations, guy anchors, utilities and access roads or driveways specifically constructed to service the tower, structures, equipment or utilities shall be removed, and the land returned to a condition as near to the original pre-construction condition aspossible.

4. At the time of approval, the applicant for a new tower shall post a performance guarantee in the form of a continuous corporate surety bond, an irrevocable letter of credit, or an escrow account infavor of the town equal to one hundred twenty-five (125) percent of the estimated demolition and removal cost of the tower and associated facilities if abandoned at any time by the applicant. Such performance guarantee shall be satisfactory to the Select Board as to the issuer, form, sufficiency, surety and manner of execution. All performance guarantees shall be on a continuous basis, with any provision for cancellation to include that a minimum thirty (30) day notice of cancellation or non-renewal be sent by certified mail to the town of North Yarmouth. If there are two or more users of a single tower or WCF, then this provision shall not apply until all users cease using the tower orWCF.

5. If all antennas above a manufactured connection on a tower are removed, the resulting unused portions of the tower shall subsequently be removed within six (6) months.

6. The replacement of all or portions of a WCF previously removed requires a new site plan approvalper Section IV. Site Plan Review and Conditional Use Procedures.

M. **Inspections**:

1. Inspection of towers by a Maine registered professional engineer shall be performed to insure structural integrity. Such inspections shall be performed as follows:

   a. Monopole towers: At least once every seven (7) years following completion of construction. Theinspection shall take place between the sixth and seventh year of the repeat sequence.

   b. Self-supporting towers: At least once every five (5) years following completion of construction. Theinspection shall take place between the fourth and fifth year of the repeat sequence.

   c. Guyed towers: At least once every three (3) years following completion of construction. The inspectionshall take place between the second and third year of the repeat sequence.

2. The inspection report shall be submitted to the CEO within thirty (30) days of its receipt by the tower owner.Based upon the results of the inspection, the CEO may require repair or demolition of the tower.

3. The cost of such inspections, reports, repairs or demolition required under this Section of the Ordinance shall be borne entirely by the tower owner. Required repairs shall be completed within ninety (90) days or less as required by the CEO for safety reasons.

4. Failure to provide required inspection reports in the required time schedule shall be deemed primae facie evidence of abandonment.

SECTION 11.9 [RESERVED]

SECTION 11.11 ADVANCED WASTEWATER TREATMENT SYSTEMS (WHERE REQUIRED)

A. Purpose and Applicability: The purpose of this section is to preserve and protect public health, safety, and welfare by ensuring that advanced wastewater treatment systems installed in the Town of North Yarmouth function as designed and that owners of advanced wastewater treatment systems provide for their proper maintenance. Advanced wastewater treatment systems are required for lots in the Village Center District to take advantage of reduced minimum lot size requirements, as further specified in Table 7.2, Footnote 4; are required for nursing homes and congregate care facilities located in the Groundwater Overlay District, as further specified in Table 7.1, Footnote 4; and provide a mechanism for clustered housing developments and open space developments to take advantage of reduced minimum lot sizes, as further specified in Section 11.3.C.9.a.2.

B. Standards and Requirements for Advanced Wastewater Treatment Systems:

1. Nitrogen Removal.

Advanced wastewater treatment systems shall employ a denitrification process and shall have a nitrogen removal capacity that meets the standards of NSF 245: Certification for Global Wastewater Market Acceptance.

2. Form HHE-300 Required.

a. The owner(s) of an advanced wastewater treatment system constructed, expanded, enlarged, rebuilt, or replaced, on or after the effective date of this section, shall prepare, execute, and record

in the Cumberland County Registry of Deeds a Pre-treatment Maintenance Agreement form (Form HHE-300, prepared by Maine Department of Health and Human Services, Maine Center for Disease Control and Prevention).

b. The owner(s) shall provide a copy of the recorded Form HHE-300 with recording information to the CEO prior to receiving a certificate of occupancy for the dwelling unit.

c. Replacement of an advanced wastewater treatment system shall require the owner(s) of the dwelling unit to complete and record a new Form HHE-300 and to submit a copy of the recorded form within fourteen (14) days of the date of installation.

3. Maintenance Agreement Required.

a. The owner(s) of a property that is served by an advanced wastewater treatment system installed on or after the effective date of this section must execute a maintenance agreement providing for maintenance and repair of the advanced wastewater treatment system in accordance with the requirements of that system's manufacturer, with a company certified to provide such maintenance. A copy of an executed maintenance agreement must be provided to the CEO within 180 days of the installation of the advanced wastewater treatment system. The property owner shall provide the CEO with a copy of a substitute or replacement maintenance agreement within ten (10) days of the expiration or cancellation of a prior maintenance agreement. New owners of a property shall provide a copy of a replacement maintenance agreement, or shall provide written certification that the previously-existing maintenance agreement has been transferred to them, to the CEO within sixty (60) days of closing.

b. Maintenance agreements required under this section shall specify the manufacturer's maintenance and repair requirements for the advanced wastewater treatment system, and shall provide for annual sampling and testing of the system's effluent. The results of such effluent tests shall be provided to the CEO and to the Yarmouth Water District (YWD) within one (1) year of the effective date of this section, and then again by December 31 of each calendar year following. The CEO shall annually provide written notice of this requirement to all affected property owners on or about September 1 of each calendar year.

c. Effluent testing shall include, but not be limited to: Total Suspended Solids (TSS), Five Day Biological Oxygen Demand (BOD5), and total nitrogen concentration.

d. The CEO and YWD shall coordinate to establish and maintain a database of advanced wastewater treatment systems in order to enforce this provision.

4 Minimum Lot Size:

a. The minimum lot size can be reduced in the VC to 20,000 square feet when the lot is served by an advanced wastewater treatment system, or the existing system is retrofitted with an advanced wastewater system that that meets or exceeds the standards and requirements imposed by Section 11.11.B of this Article.

b. GPD or gallon per day design flows may be utilized when presented and proven to not exceed the assumed 4 bedroom or 360 gpd flows of a typical residential home per lot, this type of development requires Planning Board approval.

c. Pocket Neighborhoods allow for the use of reduced lot size below 20,000 sf, consistent with Section 7.6(D).

XII. DEFINITIONS [AMENDED 6/19/21;4/30/22; 06/17/23; 6/17/24]

For purposes of this Ordinance, the following terms, words and phrases shall have the meanings given herein. All words not defined herein shall have their customary and usual meanings. Where so indicated by the text, these definitions also include substantive regulations. Where reference is made to town or state laws, ordinances, or regulations, each reference to a particular law, regulation, or section shall includeall amendments and successor sections.

Abutter: For purposes of giving notices required by this ordinance, the term abutter includes owners of any property any portion of which is located within five hundred (500) feet of the perimeter of the property which is the subject of the notice. For all other purposes, the term abutter means a person whose property shares all or part of a common lot line with the property under consideration or whose property is separated by a public or private road from the property under consideration and is located wholly or partly opposite the property under consideration. [Amended 5/30/09]

Accessory Dwelling Unit: A self-contained dwelling unit located within, attached to or detached from a single-family dwelling unit located on the same parcel of land.

Accessory Building or Structure: A detached or attached subordinate building or structure, the use of which is clearly incidental and related to that of the principal building or use of land, and which is located on the same lot as the principal building or use. For residential uses, accessory buildings and structures shall include, but not be limited to, the following: garage, gazebo, greenhouse, home workshop, recreational facilities for use by the occupants of the residence, such as a swimming pool or a tennis court,and related structures.

Accessory Structure or Use (applicable withing the Residential Shoreland District and the Resource Protection District, only): A use or structure which is incidental and subordinate to the principal use or structure. Accessory uses, when aggregated, shall not subordinate the principal use of the lot. A deck or similar extension of the principal structure or a garage attached to the principal structure by a roof or a common wall is considered part of the principal structure. [Amended 5/17/08]

Acre: 43,560 square feet of horizontal area.

Advanced Wastewater Treatment Systems (AWT): A wastewater treatment plant that meets the U.S. Environmental Protection Agency secondary treatment guidelines for septic effluent when added to a septic tank and disposal field system.

Affordable Housing Development, Village Center District:

a. For rental housing, a dwelling unit in which a household whose income does not exceed 80% of the median income for the area as defined by the United State Department of Housing and Urban Development under the United States Housing Act of 1937, Public Law 75-4124, 50 Stat. 888, Section 8, as amended, can afford a majority of the units that the developer designates as affordable without spending more than 30% of the household's monthly income on housing costs.

b. For owned housing, a dwelling unit in which a household whose income does not exceed 120% of the median income for the area as defined by the United States Department of Housing and Urban Development under the United States Housing Act of 1937, Public Law 75-412, 50 Stat. 888, Section 8, as amended, can afford a majority of the units that the developer designates as affordable without spending more than 30% of the household's monthly income on housing costs.

c. For purposes of this definition, "majority" means more than half of proposed and existing units on the same lot.

d. For purposes of this definition, “housing costs” include, but are not limited to:

1. For a rental unit, the cost of rent and any utilities (electric, heat, water, sewer, and/or trash) that the household pays separately from the rent; and

2. For an ownership unit, the cost of mortgage principal and interest, real estate taxes (including assessments), private mortgage insurance, homeowner’s insurance, condominium fees, and homeowners’ association fees.

Affordable Housing, all other districts:

Residential dwelling units that may be rented or purchased for occupancy by buyerswith low incomes and moderate incomes as established for the Portland, ME HUD Metro FMR Area by the U.S. Department of Housing and Urban Development. An owner-occupied housing unit is affordable to a household if the unit’s sale price is reasonably anticipated to result in monthly housing costs (including mortgage principal and interest payments, mortgage insurance costs, homeowners’ insurance costs, and real estate taxes) that do not exceed twenty-eight percent (28%) of the household’s gross monthly income. Determination of mortgage amounts and payments are to be based on down payment rates and interest rates generally available to households in this target group. A renter-occupied housing unit is affordable toa household if the unit’s monthly housing costs, including rent, do not exceed twenty-eight percent (28%) of the household’s gross monthly income.

Aggrieved Party: An owner of land whose property is directly or indirectly affected by the granting or denial of a permit or variance under this Ordinance; a person whose land abuts land for which a permit orvariance has been granted; or any other person or group of persons who have suffered particularized injuryas a result of the granting or denial of such permit or variance.

Agriculture: The production, boarding, keeping or maintenance for sale or lease of plants and/or animals,including but not limited to: forages and sod crops; grains and seed crops; dairy animals and dairy products;poultry and poultry products; livestock; fruits and vegetables; and ornamental and green house products. Agriculture does not include forest management and timber harvesting activities. Agriculture does includeactivities on the parcel in support of the agriculture use. [Amended 5/30/09]

Airport Fueling Area: Area in which aircraft refueling occurs and in which fuel is stored.

Alternative Tower Structure (ATS): Clock towers, bell steeples, light poles, water towers, electrical transmission line towers, smokestacks, and similar mounting structures that camouflage, conceal or support the presence of antennas or towers.

Animal Husbandry: The raising of animals for commercial gain. Any animal husbandry operation that filesan IRS federal income tax form F shall be considered a commercial operation.

Antenna/Antenna Array: A system of one or more rods, panels, discs or similar devices used for the transmission or reception of radio frequency (RF) signals through electromagnetic energy. These include,but are not limited to, omni-directional antennas (whip or rod), directional antennas (panel) and parabolic antennas (dish or disc).

Antenna Support Structure: Any pole, telescoping mast, tower tripod, or any other structure which attaches to a tower and supports one or more antenna(s).

Applicant: The person applying for a permit or approval, including a building/land use permit, or site planreview or subdivision approval under this Ordinance.

Aquaculture: The growing or propagation of harvestable freshwater plant or animal species. [Amended 5/17/08]

Area Median Income: The midpoint of the region's income distribution as calculated on an annual basis by the U.S. Department of Housing and Urban Development.

Assembly Venue: Any building, other than a place of worship, which is used as a facility for the holding of events including meetings, weddings, wedding receptions, community meetings, or other types of group gatherings.

Attached: Connected by a shared wall to the principal structure or having physically connected finishing spaces.

Auto Chemical Suppliers Wholesaler: A commercial establishment that sells chemicals used for automotive operation, repair, or maintenance to retailers; and establishment where such chemicals are stored in bulk quantities.

Average Daily Traffic (ADT): The average number of vehicles per day that enter and exit the premises or travel over a specific section of road.

Basal Area: The area of cross-section of a tree stem at four and a half (4½) feet above ground level and inclusive of bark.

Basement: Any portion of a structure with a floor-to-ceiling height of six (6) feet or more and having morethan fifty (50%) percent of its volume below the existing ground level.

Bed and Breakfast: An owner-occupied building in which up to nine (9) guest rooms are used to provideovernight accommodations for transient guests.

Best Management Practices, Groundwater Protection: Common sense operational procedures for handling, storage and disposal of regulated substances; procedures designed to minimize the impact of certain activities or land uses on groundwater.

Boat Launching Facility: A facility designed primarily for the launching and landing of watercraft, and which may include an access ramp, docking area, and parking spaces for vehicles and trailers.

Buffer Area: A part of a property or an entire property, which is not built upon and is specifically intendedto separate and thus minimize the effects of a land use activity (e.g. noise, dust, visibility, glare, etc.) on adjacent properties or on sensitive natural resources.

Building: Any structure having a roof supported by columns or walls for the shelter of persons, animals orpersonal property.

Building Envelop: The two dimensional space within which a structure is permitted to be built on a lot andthat is defined by minimum setbacks and/or other areas where development is restricted.

Business and Professional Offices: Establishments primarily engaged in rendering services on a fee orcontract basis such as, but not limited to: advertising and mailing; building maintenance; employment services; research; or the office of a member of a recognized profession maintained for the conduct of thatprofession.

Campground: Any area or tract of land used to accommodate for commercial purposes two or more parties in temporary living quarters, including but not limited to tents, recreational trailers, camping outfits,or other shelters.

Canopy: The more or less continuous cover formed by tree crowns in a wooded area. [Amended 5/17/08]

Cemetery: An area where dead bodies and cremated remains are buried. [Amended 6/18/11]

Centrally Managed Water System: A water system which provides water for human consumption through pipes or other constructed conveyances to at least 15 service connections or serves an average of at least 25 people for at least 60 days per year as regulated by 10-144 CMR Chapter 231, Rules Relating to Drinking Water. This water system may be privately owned. The Yarmouth Water District is a “Community Water System”, which serves people in their place of residence. There are two (2) other types of public water supplies that are regulated by state and federal law: “Non-Transient Non-Community Water Systems” such as schools or office buildings, and “Transient Non-Community Water Systems”, which serve a constantly changing, transient population such as motels, restaurants and campgrounds.

Certificate of Occupancy: The municipal approval for occupancy granted pursuant to 25 M.R.S. §2357-A or the Maine Uniform Building and Energy Code adopted pursuant to Title 10, Chapter 1103 of the Maine Revised Statutes. Certificate of occupancy may also be referred to as issuance of certificate of occupancy or other terms with a similar intent.

Chemical Bulk Storage: Storage of a chemical or chemicals in a container or containers larger than thoseintended for normal homeowner or retailer purposes. Proper, non-commercial, homeowner use of chemicals not included.

Chemical Reclamation: Commercial processing or storage of used chemicals intended for re-use.

Clustered Housing Development: A residential development planned and developed as a whole or in aprogrammed series of developments, which allows for the compact grouping of dwelling units. Cluster developments treat the developed area as an entirety to promote flexibility in design, architectural diversity, the efficient use of land, a reduction in the size of road and utility systems, the creation of permanent, common open space, and the permanent retention of the natural characteristics of the land.

Code Enforcement Officer: The person duly authorized by the town to carry out the duties as prescribed herein.

Commercial Use: The use of lands, buildings, or structures, other than a "home occupation," defined below, the intent and result of which activity is the production of income from the buying and selling of goods and/or services, exclusive of rental of residential buildings and/or dwelling units.

Commercial Wastewater: Any wastewater from non-domestic sources, such as beauty salons or auto body repair shops, for example. This wastewater may contain hazardous materials and requires special treatment or disposal.

Common Open Space: Land within or related to a subdivision, not individually owned or within an individual lot, which is designed and intended for the common use or enjoyment of the residents of the development or the general public. It may include complementary structures and improvements, typically used for maintenance and operation of the open space, such as for outdoor recreation.

Community Living Arrangements: As defined in 30-A M.R.S. Section 4357 - housing for eight (8) or fewer persons with “disabilities” that is approved, authorized, certified or licensed by the state of Maine and mustbe deemed a single family use. “Disabilities” have the same meaning as the term “handicap” in the federal Fair Housing Act, 42 U.S.C. § 3602(h). “Handicap” means, with respect to a person –

1. A physical or mental impairment which substantially limits one or more of such person’s major life activities,

2. A record of having such impairment, or being regarded as having such impairment, but such term

does not include current, illegal use of or addiction to a controlled substance.

Comparable Sewer System: Any subsurface wastewater disposal system that discharges over 2,000 gallons of wastewater per day as regulated by 10-144 C.M.R. Chapter 241, *Subsurface Wastewater Disposal Rules*.

Complete Application: An application shall be considered complete upon submission of the required feeand all information required by this Ordinance, or by a vote by the CEO or Planning Board, as applicable,to waive the submission of required information.

Complete Substantial Construction: The completion of a portion of the improvements that represents no less than thirty (30%) percent of the costs of the proposed improvements within a development or subdivision. Ifa subdivision is to consist of individual lots to be sold or leased by the subdivider, the cost of constructionof buildings on those lots shall not be included. If the applicantproposes to construct the buildings within the subdivision, the cost of building construction shall be includedin the total costs of proposed improvements.

Comprehensive Plan: A document or interrelated documents consistent with 30-A M.R.S. § 4326(1)-(4), including the strategies for an implementation program which are consistent with the goals and guidelines established pursuant to Title 30-A Chapter 187 Subchapter II.

Conditional Use: A Conditional Use is a structure or use that is generally not appropriate in a given zoningdistrict, but with restrictions and if controlled as to location, size and off-site impacts may have no adverseeffects upon the public health, safety or welfare, surrounding properties, the natural environment, or on municipal services. The only structures or uses that shall be permitted as conditional uses are those approved as Conditional Uses by the Planning Board.

Conservation Easement: A non-possessory interest in real property imposing limitations or affirmative obligations, the purposes of which include retaining or protecting natural, scenic or open space values of real property; assuring its availability for agricultural, forest, recreational or open space use; protecting natural resources; or maintaining air or water quality.

Demolition Permit: Official authorization to remove part, or all, of a building or structure.

Density: The number of dwelling units per acre of land, subject to dimensional requirements.

Density, Base: The maximum number of units allowed on a lot not used for affordable housing based on dimensional requirements in this Ordinance.

Developed Area: Any area on which a site improvement or change is made, including buildings, landscaping, parking areas, and streets.

Designated Growth Area: An area that is designated in the Town's Comprehensive Plan as suitable for orderly residential, commercial, or industrial development, or any combination of those types of development, and into which most development projected over ten (10) years is directed.

Development (applicable within the Residential Shoreland District and the Resource Protection District, only): A change in land use involving alteration of the land, water or vegetation, or the addition or alteration of structures or other construction not naturally occurring. [Adopted 5/17/08]

Dimensional Requirements: Requirements which govern the size and placement of structures including, but not limited to, the following requirements: building height, lot area, setbacks, minimum frontage and lot depth.

Disability: Any disability, infirmity, malformation, disfigurement, congenital defect or mental condition caused by bodily injury, accident, disease, birth defect, environmental conditions or illness; and also includes the physical or mental condition of a person which constitutes a substantial handicap as determined by a physician or in the case of mental handicap, by a psychiatrist or psychologist, as well as any other health or sensory impairment which requires special education, vocational rehabilitation or related services.

District: A part, zone or geographical area within the town within which specific zoning and/or developmentregulations apply.

Driveway (applicable to the Residential Shoreland and Resource Protection Districts, only): A vehicular access-way less than five hundred (500) feet in length serving two (2) single-family dwellings or one two-family dwelling, or less. [Amended 5/17/08]

Driveway: A vehicular access-way serving two dwelling units or less.

Drive-through Eating Place: A business where food is purchased in such a manner as to permitcustomers or patrons to receive goods or services while remaining in their motor vehicles.

Domestic Wastewater: Any wastewater produced by ordinary living uses, including liquid waste containing animal or vegetable matter in suspension or solution, or the water-carried waste from the discharge of water closets, laundry tubs, washing machines, sinks, dishwashers, or other source of water-carried wastes of human origin. This definition includes wastewater from commercial, industrial, or residential sources which is of a similar quality (constituents and strength) to that produced by these same ordinary living uses.

Duff: Decaying organic matter consisting of the dead leaves, evergreen needles, tree parts and otherorganic matter typically found on the forest floor.

Duplex: A detached building used for residential occupancy by two (2) families living independently of each other. The dwelling units are totally separated from each other by an un-pierced wall extending from groundto roof.

Dwelling: A building designed or used as the living quarters for one or more families. The term shall notbe deemed to include motel, rooming house, lodging house, hotel, inn or trailer.

Dwelling, detached: A dwelling that is designed to be and is substantially separate from any other buildingor buildings except accessory buildings.

Dwelling, Multifamily (or Multifamily Dwelling): A structure containing three (3) or more dwelling units.

Dwelling, Single-Family Detached: A structure containing one (1) dwelling unit.

Dwelling Unit: Any part of a structure, which through sale or lease, is intended for human habitation, including single-family housing and the separate living quarters intended for occupancy by only one family or individual at a time contained within multifamily housing, condominiums, time-share units, and apartments.

Emergency Operations: Operations conducted for the public health, safety or general welfare, such as protection of resources from immediate destruction or loss, law enforcement, and operations to rescue human beings, property and livestock from the threat of destruction or injury.

Essential Services: Gas, electrical or communication facilities; steam, fuel, electric power or water transmission or distribution lines, towers and related equipment; telephone cables or lines, poles and

relatedequipment; gas, oil, water, slurry or other similar pipelines; municipal sewage lines, collection or supply systems; and associated storage tanks. Such systems may include towers, poles, wires, mains, drains, pipes, conduits, cables, fire alarms and police call boxes, traffic signals, hydrants and similar accessories,but shall not include service drops or buildings which are necessary for the furnishing of such services. Essential services do not include wireless communications towers.

Expansion of a Structure: An increase in the floor area or volume of a structure, including all extensions such as, but not limited to attached decks, garages, porches and greenhouses.

Expansion of a Use: The addition of one or more months to a use's operating season; or the use of more floor area or ground area devoted to a particular use.

FAA: Federal Aviation Agency

Family: One or more persons occupying a premises and living as a single housekeeping unit.

Family Burial Grounds: An area where dead bodies and cremated remains are buried. Family burial grounds must comply with all space and dimensional requirements in Table 7-1 and must comply with all applicable state regulations. The Town shall have no maintenance obligations except as required by statelaw. [Amended 6/18/11].

Farm Stand: A roadside stand not exceeding 200 square feet in floor area selling only farm, garden, greenhouse, or nursery products, and between Labor Day and Christmas, cut Christmas trees, garlands, wreaths and wreath material. A Farm Stand may not sell cannabis in any form.

FEMA: Federal Emergency Management Agency

Final Plan: The final drawings on which the applicant's plan of a subdivision or development is presentedto the Planning Board for approval and which, if approved, may be recorded at the Cumberland County Registry of Deeds, in the case of a subdivision.

Floodway: The channel of a river or other watercourse and adjacent land areas that must be reserved inorder to discharge the one hundred (100) year flood without cumulatively increasing the water surface elevation by morethan one foot in height.

Floor Area (Applicable to areas outside the Residential Shoreland District and Resource ProtectionDistrict): The sum of the gross horizontal area of the floors of a building, excluding basement floor areas.

Floor Area (Applicable to areas within the Residential Shoreland District and Resource ProtectionDistrict): The sum of the horizontal areas of the floor(s) of a structure enclosed by exterior walls, plus thehorizontal area of any unenclosed portions of a structure such as porches and decks.

Food Processor: A commercial establishment that processes, treats, bottles, cans or otherwise modifiesfood in preparation for wholesale.

Forest Management Activities: Timber cruising and other forest resource evaluation activities, pesticideor fertilizer application, management planning activities, timber stand improvement, pruning, regenerationof forest stands, and other similar or associated activities, exclusive of timber harvesting and theconstruction, creation or maintenance of roads.

Foundation: The supporting substructure of a building or other structure, excluding wooden sills and postsupports, but including basements, slabs, frost walls, or other base consisting of concrete, block, brick or similar material. [Amended 5/17/08]

Fuel Oil Distributor; Fuel Oil Storage: The storage of fuel for distribution or sale. Storage of fuel oil not for domestic use, i.e., not in tanks directly connected to burners.

Functionally Water-dependent Uses: Those uses that require, for their primary purpose, location on submerged lands or that require direct access to, or location in, coastal or inland waters and that can not be located away from these waters. The uses include, but are not limited to commercial and recreational fishing and boating facilities, excluding recreational boat storage buildings, finfish and shellfish processing,fish storage and retail and wholesale fish marketing facilities, waterfront dock and port facilities, shipyardsand boat building facilities, marinas, navigation aids, basins and channels, retaining walls, industrial usesdependent upon water-borne transportation or requiring large volumes of cooling or processing water that can not reasonably be located or operated at an inland site, and uses thatprimarily provide general public access to the water. [Amended 5/17/08]

Gas Station, Service Station: Any place of business at which gasoline, other motor fuels or motor oil are sold to the public for use in a motor vehicle, regardless of any other business on the premises.

Ground Cover: Small plants, fallen leaves, needles and twigs, and the partially decayed organic matter of the forest floor. [Adopted 5/17/08]

Growth Districts: Growth districts include the Village Center District and Village Residential District.

Hazardous Material: Any gaseous, liquid or solid materials, either in pure form or incorporated into othermaterials, designated as hazardous by the Maine Department of Environmental Protection.

Hazardous Waste: Any substance identified under Chapter 850, Identification of Hazardous Wastes, of the rules of the State of Maine, Department of Environmental Protection, effective date July 1, 1980, including revisions or amendments thereto, and any radioactive waste material.

Heat Treator, Smelter, Annealer, Descaler: Commercial metal-working establishments involved with these processes on a regular basis.

Height of a Structure: The vertical distance between the mean original (prior to construction) grade at thedownhill side of the structure and the highest point of the structure, excluding wireless communications facilities and excluding chimneys, steeples, antennas, and similar appurtenances that have no floor area.[Amended 5/17/08]

Height, Wireless Communications Facility Tower or Alternative Tower Structure: The vertical distance measured from the lowest point within 10 feet of the base of the structure on the ground to the highest point of the tower or ATS, including the base pad, all antennas and other attachments. When towers are mounted upon buildings or other structures, the total vertical height is measured from the lowestpoint within ten (10) feet of the ground level of the building or structure to the highest point of all appurtenanceson the tower.

High Intensity Soil Survey: A map prepared by a Maine Certified Soil Scientist, identifying the soil typesdown to one eighth (1/8) acre or less at a scale equivalent to the subdivision plan submitted. The soils shall be identifiedin accordance with the National Cooperative Soil Survey. The map shall show the location of all test pits used to identify the soils, and shall be accompanied by a log of each sample point identifying the textural classification and the depth to seasonal high water table or bedrock at that location. Single soil test pits and their evaluation for suitability for subsurface waste water disposal systems shall not be considered toconstitute high intensity soil surveys.

Home Occupation: A home occupation is an occupation or profession which is: customarily carried on ina dwelling unit or in a building or other structure accessory to a dwelling unit; carried on by a member of the family residing in the dwelling unit; clearly incidental, compatible, and secondary to the use of the dwelling unit of residential purposes; so located and conducted that the average neighbor, under

normal circumstances, would not be aware of its existence. Any use that would be prohibited as a commercial business in the Groundwater Protection Overlay District is also prohibited as a home occupation. A homeoccupation must comply with the requirements of Section 11-4. Home Occupations. [Amended 5/30/09]

Housing: Any part of a structure which, through sale or lease, is intended for human habitation, including single-family and multifamily housing, condominiums, time-share units, and apartments. For purposes of this rule, this does not include dormitories, boarding houses or other similar types of housing units. This also does not include transient housing or short-term rentals, unless otherwise allowed in this Ordinance.

Impervious Surface: That portion of a site which is or will be improved with principal and accessory buildings and structures, and roads, driveways, parking lots, pedestrian walkways, signs and other improvements on the surface of the ground which are more impervious than the natural surface of the site.

Increase in Nonconformity of a Structure: Any change in a structure or property which causes further deviation from the dimensional standard(s) creating the nonconformity such as, but not limited to, reductionin water body, tributary stream or wetland (Knight's Pond or the Deer Brook wetland) setback distance, increase in lot coverage, or increase in height of a structure. Property changes or structure expansions which either meet the dimensional standard or which cause no further increase in the linear extent of nonconformance of the existing structure shall not be considered to increase nonconformity. For example,there is no increase in nonconformity with the setback requirement for water bodies, wetlands (Knight's Pond or the Deer Brook wetland), or tributary streams if the expansion extends no further into the requiredsetback area than does any portion of the existing nonconforming structure. Hence, a structure may be expanded laterally provided that the expansion extends no closer to the water body, tributary stream, or wetland than the closest portion of the existing structure from that water body, tributary stream, or wetland(Deer Brook wetland or Knight's Pond). Included in this allowance are expansions, which in-fill irregularly,shaped structures. [Amended 5/17/08]

Individual Private Campsite: An area of land which is not associated with a campground, but which is developed for repeated camping by only one group not to exceed 10 individuals and which involves site improvements which may include but not be limited to a gravel pad, parking area, fire place, or tent platform.

Industrial: The assembling, fabrication, finishing, manufacturing, packaging or processing of goods, or the extraction of minerals. [Adopted 5/17/08]

Inert Fill: Material placed on or into the ground as fill; the material will not react chemically with soil, geologic material, or groundwater that may be present at the site.

Institutional: A non-profit or quasi-public use, or institution such as a church, library, public or private school, hospital, or municipally owned or operated building, structure or land used for public purposes. [Adopted 5/17/08]

Junkyard/Automobile Graveyard: A lot or part thereof, exposed to the elements, which is used for the storage or sale of second hand products or materials, such as automobile parts, building supplies, bottles,papers, household appliances, and/or old or scrap iron, copper, brass. Also, includes the storage of automobiles, trucks or other motor vehicles, two or more of which have remained for a period of 6 consecutive months either unregistered or without state inspection certificates affixed thereto.

Kennel: A commercial establishment or non-profit animal shelter in which six (6) or more dogs, cats or other similar household pets are housed, bred, boarded, trained or sold. The number of animals in this definitionshall not include animals under the age of six (6) months.

Land Reclamation: The placement of solid fill and materials in a formerly excavated gravel pit for the purpose of reclamation of such gravel pit, provided, however, that all necessary Maine Department of Environmental Protection permits have been obtained.

Land Use Ordinance: An ordinance or regulation of general application adopted by the municipal legislative body which controls, directs, or delineates allowable uses of land and the standards for those uses.

Large Scale Solar System: Ground Mount solar-electric system greater than five thousand (5,000) sq ft of air space.

Level of Service: A description of the operating conditions a driver will experience while traveling on a particular street or highway calculated in accordance with the provisions of the Highway Capacity Manual,1991 edition (or the most current edition), published by the National Academy of Sciences, TransportationResearch Board. There are six (6) levels of service ranging from Level of Service A, with free traffic flow and no delays to Level of Service F, with forced flow and congestion resulting in complete failure of the roadway.

Licensed Forester: A forester licensed under 32 M.R.S. Chapter 76. [Adopted 5/17/08]

Light Manufacturing: A business establishment engaged in the manufacturing, packaging, processing, assembling, or testing of goods or products, provided that all operations shall be carried on indoors and insuch a manner as to confine smoke, fumes, dust, odors, and noise to the premises, and that no operationsshall constitute a hazard by reason of the potential for fire, explosion, radiation release or other casualty.

Lot: A single parcel of developed or undeveloped land

Lot Area: The area of land enclosed within the boundary lines of a lot, minus the following: (1) land belowthe normal high-water line of the Royal River, Chandler Brook and the East Branch; (2) land below the high-water line of those sections of Toddy Brook, Pratt's Brook, Deer Brook and the unnamed tributary toChandler Brook that are zoned as Resource Protection Districts; and (3) land below the upland edge of the Deer Brook Wetland or Knight's Pond, including the Knight's Pond wetland, and areas beneath roadsserving more than two lots.

Lot, Back: A lot that does not abut a street, except as allowed in Section 8-3 where the required fifty (50) foot wide right-of-way may abut the street. [Amended 6/18/11]

Lot, Corner: A lot with at least two contiguous sides abutting a street or right-of-way.

Lot Coverage: The percentage of total area of the lot that is covered by impervious areas or surfaces, such as buildings, roads, structures, parking lots and other non-vegetated surfaces.

Lot, Double Frontage: A lot with at least two non-contiguous sides abutting upon a street.

Lot, Interior: Any lot other than a back lot, corner lot or double frontage lot.

Lot Lines: The lines bounding a lot as defined below:

1. Front Lot Line:
    a. Interior Lot: The lot line abutting the street.
    b. Corner Lot or Through Lot: The lot line separating the lot from all abutting streets.

c. Back Lot: The line closest to and most parallel to the street from which vehicular access to the lot is gained.

2. **Rear Lot Line:** The lot line opposite the front lot line. On a lot pointed at the rear, the rear lot line shall be an imaginary line between the side lot lines parallel to the front lot line, not less than ten (10) feet long, lying farthest from the front lot line.

3. **Side Lot Line:** Any lot lines other than the front lot line or rear lot line.

Lot Width: For a back lot, the shortest distance between the side lot lines of the lot measured at the frontsetback line. For any other lot, the distance between the side lot lines of the lot measured at the front lot line.

Lot Width, Minimum (applicable to the Residential Shoreland District and the Resource ProtectionDistrict): The closest distance between the side lot lines of a lot. When only two lot lines extend into the shoreland zone, both lot lines shall be considered to be side lot lines. [Amended 5/17/08]

Manufactured Housing: This term shall be as defined in 30-A M.R.S. Sec. 4358, as amended, and shall include both “mobile homes” and “modular homes” as defined therein.

Manufactured Housing on Individual Lot: Manufactured housing that meets the minimum requirementsof Section 11-5. Manufactured Housing on Individual Lots.
Mobile Home Park: A parcel of land under unified ownership approved by the town for the placement of 3 or more manufactured homes.

Mobile Home Park Lot: The area of land on which an individual home is situated within a mobile home park and which is reserved for use by the occupants of that home.

Marina: A business establishment having frontage on navigable water and, as its principal use, providingfor hire offshore moorings or docking facilities for boats, and which may also provide accessory services such as boat and related sales, boat repair and construction, indoor and outdoor storage of boats and marine equipment, bait and tackle shops and marine fuel service facilities.

Market Value: The estimated price a property will bring in the open market and under prevailing market conditions in a sale between a willing seller and a willing buyer, both conversant with the property and withprevailing general price levels.

Mineral Exploration: Hand sampling, test boring, or other methods of determining the nature or extent ofmineral resources which create minimal disturbance to the land and which include reasonable measures to restore the land to its original condition.

Mineral Extraction (applicable within the Residential Shoreland District and the Resource Protection District): Any operation within any twelve (12) month period which removes more than one hundred (100) cubic yardsof soil, topsoil, loam, sand, gravel, clay, rock, peat, or other like material from its natural location and to transport the product removed, away from the extraction site. [Amended 5/17/08]

Mineral Extraction (applicable outside the Residential Shoreland District and the Resource Protection District): Any operation that involves the excavation, processing, and/or storage of more than one thousand (1,000) cubic yards of soil, topsoil, loam, sand, gravel, clay, rock, peat, or other like material within any twelve (12) month period.

Native: Indigenous to the local forests. [Adopted 5/17/08]

Net Residential Acreage (Applicable to Subdivisions): The area of a tract or parcel of land which, as determined by the Planning Board, is suitable for development as a subdivision. The area shall be calculated by subtracting the following from the total acreage of the tract or parcel:

1. Areas that are cut off from the main parcel by existing land uses, improvements, topographical features or previous conveyances so that no means of access can be reasonably provided, and the land is isolated and unavailable for development;

2. Areas located below the normal high water mark of water bodies (ponds, rivers, streams or brooks) abutting or located on the parcel;

3. Areas located in the one hundred (100) year floodplain as designated on the most recently adopted Flood Insurance Rate Map and the Flood Hazard Area Map of the National Flood Insurance Program forthe town of North Yarmouth;

4. Areas within two hundred fifty (250) feet of the Royal River, Chandler Brook and the East Branch;

5. Areas classified as wetlands as defined by the Maine Natural Resources Protection Act.

6. Areas which have been created by filling or draining a pond orwetland;

7. Areas consisting of un-reclaimed gravel pits, unless the subdivision application includes a reclamation plan;

8. Areas having slopes greater than twenty percent (20%);

9. Areas having very poorly drained soils, and

10. Areas subject to existing rights-of-ways or easements.

In addition, fifteen (15%) percent of the total acreage of the site remaining after subtracting those areas listed above shall be deducted as an allowance for roads, parking and rights of way, whether or not the actualarea devoted to roads is greater or less than fifteen (15%) percent. However, the fifteen (15%) percent deduction shall notbe subtracted when there are no roads planned as part of a subdivision.

For determination of poorly and very poorly drained soils, the following guidelines shall apply:

1. Soil classifications shall be developed based upon high intensity soils mapping conducted by a Maine certified soil scientist, in accordance with the standards established by the Maine Association of Professional Soil Scientists and the National Cooperative Soils Survey unless waived by the Planning Board pursuant to number two (2) below.

2. In cases where the requirement of a high intensity soils map is waived by the Planning Board, deductions for unsuitable soils shall be determined in the following manner: Land areas with a water table within 6 inches of the surface for three (3) or more months a year shall be deducted. In making this determination, the Planning Board shall consider medium-intensity soils maps, perform site visits,consult experts and review other available information as provided by the applicant.

Net Residential Density: Net residential density shall mean the number of dwelling units per net residential acre.

Non-conforming Building or Structure: A building or structure, which does not meet any one or more

ofthe following dimensional requirements: setback, height, or lot coverage, but which is allowed solely because it was in lawful existence at the time this ordinance or subsequent amendment took effect. [Amended 5/17/08]

Non-conforming Condition: Non-conforming lot, structure or use which is allowed solely because it was in lawful existence at the time this ordinance or subsequent amendment took effect. [Adopted 5/17/08]

Non-conforming Lot: A single lot of record which, at the effective date of this ordinance or amendment of this ordinance, does not meet the minimum lot area, net lot area per dwelling unit, minimum street frontage, or other similar lot requirements of the district in which it is located. It is allowed solely because it was in lawful existence at the time this ordinance or subsequent amendment took effect. [Amended 5/17/08]

Non-conforming Use: Use of buildings, structures, premises, land or parts thereof which is not permittedin the district in which it is situated, but which is allowed to remain solely because it was in lawful existenceat the time this ordinance or subsequent amendment took effect. [Amended 5/17/08]

Non-Domestic Wastewater: Any wastewater from commercial, industrial, or residential sources which has constituents unlike that of or of significantly higher strength than that of domestic wastewater.

Normal High-water Line: That line which is apparent from visible markings, changes in the character of soils due to prolonged action of the water or changes in vegetation, and which distinguishes between predominantly aquatic and predominantly terrestrial land. Areas contiguous with rivers (Royal River, Chandler Brook, East Branch of Chandler Brook) that support non-forested wetland vegetation and hydricsoils and that are at the same or lower elevation as the water level of the river during the period of normalhigh-water are considered part of the river. [Amended 5/17/08]

One Hundred-Year (100-year) Floodplain: Means the flood having a one percent chance of being equaled or exceeded in any given year. Referred to as the “base flood” within the town’s Floodplain Management Ordinance.

Open Space: The portion of a lot or site which is maintained in its natural state or planted with grass, shrubs, trees or other vegetation and which is not occupied by buildings, structures or other impervious surfaces. A significant portion of the open space should include high value open space areas as identifiedin the Comprehensive Plan.

Open Space Development: A subdivision with a very low residential density, less than one (1) residential unit on ten (10) acres, designed to preserve open space, and in particular to permanently preserve high value openspace as defined in the Comprehensive Plan.

Parcel of Land: All contiguous land in the same ownership, provided that lands located on opposite sidesof a public street or private road shall be considered each a separate tract or parcel of land unless the roadwas established by the owner of land on both sides thereof.

Passive Recreation: Leisure activities, including but not limited to walking, picnicking, and hiking, that areof an informal nature, do not take place at prescribed sites of fields, and usually do not require extensive equipment. Passive recreation odes not include team sports or the use of motorized vehicles.

Person: An individual, corporation, governmental agency, municipality, trust, estate, partnership, association, two or more individuals having a joint or common interest, or other legal entity.

Piers, Docks, Wharves, Bridges and Other Structures and Uses Extending Over or Beyond the Normal High-Water Line or Within a Wetland:

Temporary: Structures that remain in or over the water for less than seven (7) months in any period of twelve (12) consecutive months.

Permanent: Structures that remain in or over the water for seven (7) months or more in any period of twelve (12) consecutive months.

Planning Board: Means the Town of North Yarmouth Planning Board.

Pond: A naturally occurring inland body of water, but not including great ponds as defined by the Maine Natural Resources Protection Act, 38 M.R.S. § 480-B(5).

Potable: Water safe for drinking as defined by the U.S. Environmental Protection Agency's (EPA) Drinking Water Standards and Health Advisories Table and Maine's interim drinking water standards for six different perfluoroalkyl and polyfluoroalkyl substances (PFAS), Resolve 2021 Chapter 82, Resolve, To Protect Consumers of Public Drinking Water by Establishing Maximum Contaminant Level for Certain Substances and Contaminants.

Preliminary Plan: The preliminary drawings indicating the proposed layout of the subdivision to be submitted to the Planning Board for its consideration.

Principal Structure: A structure in which the main or principal use of the property is conducted.

Principal Use: The primary use to which the premises are devoted, and the main purpose for which the premises exist. A principal use is a use other than one that is wholly incidental or accessory to another useon the same premises.

Professional Engineer: A professional engineer, registered in the State of Maine.

Public Facility: Any facility, including, but not limited to, buildings, property, recreation areas, and roads,which are owned, leased, or otherwise operated, or funded by a governmental body or public entity. [Adopted 5/17/08]

Public Utilities: Are facilities for the transmission or distribution of water, gas, electricity, or communication; or for the collection, treatment or disposal of wastes. This definition shall not include wireless communications towers or facilities.

Recent Flood Plain Soils: The following soil series as described and identified by the National Cooperative Soil Survey: Fryeburg, Hadey, Limerick, Lovewell, Medomak, Ondawa, Alluvial, Cornish, Charles, Podunk, Rumney, Saco, Suncook, Sunday, Winooski. [Amended 5/17/08]

Recreational Facility: A place designed and equipped for the conduct of sports, leisure time activities, and other customary and usual recreational activities, excluding boat-launching facilities.

Recreational Vehicle: A vehicle or an attachment to a vehicle designed to be towed, and designed for temporary sleeping or living quarters for one or more persons, and which may include a pick-up camper, travel trailer, tent trailer, camp trailer, and motor home. In order to be considered as a vehicle and not as a structure, the unit must remain with its tires on the ground, and must be registered with the Maine Bureau of Motor Vehicles.

Replacement System (sewage disposal): A system intended to replace: (a) an existing system which is either malfunctioning or being upgraded with no significant change of design flow or use of the structure,or (b) any existing overboard wastewater discharge. [Adopted 5/17/08]

Residual Basal Area: The average of the basal area of trees remaining on a harvested site. [Amended 5/17/08]

Restaurant: A business establishment where food and drink are prepared, served, and consumed primarily within the principal building. Providing food to patrons shall clearly be the primary use and the serving of alcoholic beverages shall be ancillary (see Tavern).

Restrictive Covenant: A provision in a deed, or other covenant conveying real property, restricting the use of the land.

Retail Sales and Services: Any business engaged in the sale of goods or services to the ultimate consumer for direct consumption and/or use.

Right-of-way: An area or strip of land described in a recorded deed and dedicated to the purpose of providing access to a parcel or parcels of land other than the land on which the right-of-way crosses. No land in the right-of-way may be used to meet any dimensional requirements of this Ordinance.

Riparian: Riparian areas are plant communities contiguous to and affected by surface and subsurface hydrogeological features or bodies of water and wetlands. Riparian areas have one or more or both of thefollowing characteristics: (a) distinctly different vegetative species than adjacent areas; (b) species similar to adjacent areas but exhibiting more vigorous or robust growth forms; and/or (c) riparian areas are usuallytransitional between wetland and upland.

Riprap: Rocks, irregularly shaped, and at least six (6) inches in diameter, used for erosion control and soil stabilization, typically used on ground slopes of two (2) units horizontal to one unit vertical or less.

River: Rivers include the free flowing length of the Royal River, Chandler Brook and the East Branch including the wetlands associated with these rivers. (See definition of “wetlands associated with rivers”)

Road (applicable outside the Residential Shoreland District and the Resource Protection District):A route or track consisting of a bed of exposed mineral soil, gravel, asphalt, or other surfacing material constructed for or created by the repeated passage of motorized vehicles. [Amended 5/17/08]

Road (applicable within the Residential Shoreland District and the Resource Protection District):A route or track consisting of a bed of exposed mineral soil, gravel, asphalt, or other surfacing material constructed for or created by the repeated passage of motorized vehicles, excluding driveways, as defined.[Amended 5/17/08]

Rural Districts: Rural districts include the Farm and Forest District, Residential Shoreland District and Resource Protection District.

Service Drop: Any utility line extension which does not cross or run beneath any portion of a water body provided that:

1. In the case of electric service

    a. The placement of wires and/or the installation of utility poles is located entirely upon the premises of the customer requesting service or upon a roadway right-of-way; and

    b. The total length of the extension is less than one thousand (1,000) feet.

2. In the case of telephone service

    a. The extension, regardless of length, will be made by the installation of telephone wires to existing utility poles, or

    b. The extension requiring the installation of new utility poles or placement underground is less than one thousand (1,000) feet in length.

Setback: The horizontal distance from a lot line, shoreline, or road to the nearest part of a structure or other regulated object or area as defined in this Ordinance.

Setback from the Water: The nearest horizontal distance from the normal high-water line of a water body,tributary stream, or the upland edge of a wetland, including Deer Brook wetland and Knight's Pond, to thenearest part of a structure, road, parking space or other regulated object or area. [Amended 5/17/08]

Shore Frontage: The length of a lot bordering on a water body or wetland measured in a straight line between the intersections of the lot lines with the shoreline. [Amended 5/17/08]

Shoreland Zone: The land areas located within two hundred fifty (250) feet, horizontal distance, of the normal high-water lineof the Royal River, Chandler Brook and the East Branch; within two hundred fifty (250) feet of the upland edge of the Deer Brook wetland and Knight's Pond; or within seventy-five (75) feet, horizontal distance, of the normal high-water line of sections of Toddy Brook, Pratt's Brook, Deer Brook, and the unnamed tributary to Chandler Brook. Theseareas are zoned as Resource Protection or Residential Shoreland Districts as displayed on the Town of North Yarmouth Zoning Map. [Adopted 5/17/08]

Shoreline: The normal high-water line, or upland edge of a wetland. [Adopted 5/17/08]

Sign: An object, device, display or structure, or part thereof, situated outdoors or indoors, which is used toadvertise, identify, display, direct or attract attention to an object, person, institution, organization, business, product, service, event or location by any means, including words, letters, figures, design, symbols, fixtures, colors, illumination or projected images.

Sight Distance: The length of an unobstructed view from a particular access point to the farthest visible point of reference on a street. Used in this Ordinance as a reference for unobstructed street visibility.

Sketch Plan: Conceptual maps, renderings, and supportive data describing the project proposed by theapplicant for initial review prior to submitting an application for subdivision or development approval.

Sludge: Residual material produced by water or sewer treatment processes, industrial processes, ordomestic septic tanks.

Small Brewery: "Small brewery" means a facility that brews, lagers and kegs, bottles or packages its own malt liquor, not to exceed thirty thousand (30,000) barrels per year.

Small Distillery: "Small distillery" means a distiller that produces spirits in an amount that does not exceed fifty thousand (50,000) gallons per year.

Small Winery: "Small winery" means a facility that ferments, ages, and bottles:

a. Up to fifty thousand (50,000) gallons per year of its own wine that is not hard cider and

b. Up to three thousand (3,000) barrels per year of its own wine that is hard cider.

Snow Dump: A location to which snow is transported and dumped by commercial, municipal, or statesnowplowing operations.

Storm Water Impoundment: Any structure designed and constructed to contain storm water runoff.

Stream: A "river, stream or brook" as defined by the Maine Natural Resource Protection Act.

Street: An existing state, county, or town way; a way dedicated for public use and shown upon a

subdivision plan approved by the Planning Board and recorded in the Cumberland County Registry of Deeds; or a way dedicated for public use and shown on a plan duly recorded in the Cumberland County Registry of Deeds prior to the establishment of the Planning Board and the grant to the Planning Board ofits power to approve plans. The term “street” shall not include those ways that have been discontinued orabandoned, nor shall it include a private easement or right of way not dedicated for public use.

Street Frontage: The width of the lot as it fronts the street.

Structure: Anything temporarily or permanently located, built, constructed or erected for the support, shelter or enclosure of persons, animals, goods or property of any kind, as defined in 38 M.R.S. § 436-A(12).

Subdivision: As defined in Title 30-A, M.R.S., Section 4401, as amended.

Subdivision, Major: Any subdivision containing more than four lots.

Subdivision, Minor: A subdivision containing not more than four lots. If a street or other municipal, wateror sewer facilities are proposed, the Planning Board may require that the subdivision be reviewed as a major subdivision.

Substantial Start: Completion of thirty (30%) percent of a permitted structure or use measured as a percentage ofestimated total cost.

Subsurface Sewage Disposal System: Any system designed to dispose of waste or waste water on or beneath the surface of the earth: includes, but is not limited to: septic tanks; disposal fields; advanced wastewater treatment systems; grandfathered cesspools: holding tanks; pretreatment filter, piping, or anyother fixture, mechanism, or apparatus used for those purposes; does not include any discharge system licensed under title 38 M.R.S. Section 414, any surface water disposal system, or any municipal or quasi-municipal waste water treatment system.

Sustained slope: A change in elevation where the referenced percent grade is substantially maintained or exceeded throughout the measured area.

Tavern: A business establishment, serving either the public or a private party, where beverages and/or food are prepared, served, and consumed predominantly within the principal building. Serving beverages shall clearly be the primary use and providing food shall be ancillary (see Restaurant).

Temporary Housing: The CEO may issue permits for temporary housing for a period not to exceed six (6) months with one six (6) month renewal possible. This provision is limited to the intended occupants of a permanent dwelling unit that is being constructed or repaired and for which a Certificate of Occupancy willbe sought.

Timber Harvesting: The cutting and removal of trees from their growing site, and the attendant operationof cutting and skidding machinery but not the construction or creation of roads. Timber harvesting does not include the clearing of land for approved construction.

Transfer Station: Facility designed for temporary storage of discarded material intended for transfer to another location for disposal or re-use.

Tributary Stream (only applicable to the Residential Shoreland District and the Resource ProtectionDistrict): A channel between defined banks created by the action of surface water, whether intermittent orperennial, and which is characterized by the lack of upland vegetation or presence of aquatic vegetation and by the presence of a bed devoid of topsoil containing waterborne deposits on exposed soil, parent material or bedrock, and which flows to the Royal River, Chandler Brook, the East

Branch, sections of Toddy Brook, Pratt's Brook, Deer Brook, and the unnamed tributary to Chandler Brook, that are zoned asResource Protection, or the Deer Brook wetland or Knight's Pond as displayed on the Zoning Map. This definition does not include the term "stream" as defined elsewhere in this Ordinance.

Upland Edge of a Wetland: The boundary between upland and wetland, including the Deer Brook wetlandand Knight's Pond. The upland edge is formed where the soils are not saturated for a duration sufficient tosupport wetland vegetation; or where the soils support the growth of wetland vegetation, but such vegetation is dominated by woody stems that are six (6) meters tall (approximately twenty (20) feet) or taller. [Amended5/17/08]

Variance: A variance is a relaxation of the terms of this Ordinance. A variance may only be authorized by the Zoning Board of Appeals pursuant to Section VI. Variances and Appeals.

Vegetation: All live trees, shrubs, ground cover, and other plants including without limitation, trees both over and under 4 inches in diameter, measured at four and a half (4½) feet above ground level.

Velocity Zone: An area of special flood hazard extending from offshore to the inland limit of the primary frontal dune along an open coast and any other area subject to high velocity wave action from storms or seismic sources.

Vernal Pool: A naturally occurring, temporary to permanent body of water in shallow depressions that fillduring the spring and fall and may be dry during the summer. The vernal pool contains no viable populations of predatory fish, and it provides primary breeding habitat for wood frogs, spotted salamanders,blue-spotted salamanders, and fairy shrimp and provides habitat for other wildlife including several endangered and threatened species. The presence of one or more of these species is usually conclusiveevidence of a vernal pool.

Volume of a Structure: The volume of all portions of a structure enclosed by roof and fixed exterior wallsas measured from the exterior faces of these walls and roof.

Water Body: Any river or stream with Resource Protection zoning to include the Royal River, Chandler Brook, the East Branch, and sections of Toddy Brook, Pratt's Brook, Deer Brook and an unnamed tributaryto Chandler Brook, as depicted on the Zoning Map.

Water Crossing: Any project extending from one bank to the opposite bank of a river or stream, whetherunder, through, or over the watercourse. Such projects include but may not be limited to roads, fords, bridges, culverts, water lines, sewer lines, and cables as well as maintenance work on these crossings. This definition includes crossings for timber harvesting equipment and related activities. [Amended 5/17/08]

Water Source Protection Area: The area with one thousand (1,000) foot radius of a public water supply as defined herein,and for the Yarmouth Water District the area within the Groundwater Protection Overlay District.

Wellhead: The specific location of a well (a hole or shaft dug or drilled to obtain water) and/or any structurebuilt over or extending from a well.

Wetland: A freshwater wetland, as defined by the Maine Natural Resource Protection Act[1]

[1] A fresh water wetland means fresh water swamps, marshes, bogs and similar areas that are: inundated or saturated by surface or groundwater at a frequency and for a duration sufficient to support, and under normal circumstances do support, a prevalence of wetland vegetation typically adapted for life in saturated soils; and not considered part of great pond, coastal wetland, river, stream or brook. (38 M.R.S. Section 480-B, or as amended).

Wetlands Associated Rivers: Wetlands contiguous with or adjacent to the Royal River and the portion ofChandler Brook from its confluence with the East Branch to the Royal River, and which during normal highwater are connected by surface water to the river. Also included are wetlands that are separated from theriver by a berm, causeway, or similar feature less than 100 feet in width, and which have a surface elevationat or below the normal high water line of the river. Wetlands associated with rivers are considered to be part of that river.

Wetland, Forested: A wetland dominated by woody vegetation that is six (6) meters tall (approximately twenty (20) feet)or taller. [Amended 5/17/08]

Wetland, High Value: A freshwater wetland, as defined by the Maine Natural Resource Protection Act, which meets one or more of the following criteria:

1. Contains a pond or a vernal pool;
2. Lies within the one hundred (100) year floodplain of a stream or a pond;
3. More than fifty (50%) percent of the dominant species in all strata of the vegetation consist of facultative wetland or obligate wetland plant species, as listed in the National List of Plant Species that Occurin Wetlands, by the U.S. Fish and Wildlife Service, latest edition.

Wetland, Low Value: A fresh water wetland, as defined by the Natural Resource Protection Act, which does not meet the criteria of a high value wetland.

Wireless Communications: Any personal wireless services as defined in the Federal Telecommunications Act of 1996 which includes FCC licensed commercial wireless telecommunications services including cellular, personal communications services (PCS), specialized mobile radio (SMR), enhanced specialized mobile radio (ESMR), paging, and similar services that currently exist or that may inthe future be developed.

Wireless Communication Facility (WCF): A facility that transmits, receives, distributes, provides or offerstelecommunications services, radio or television signals, or any other spectrum-based transmissions/receptions, together, with the facility's associated antennas, microwave dishes, horns, cables, wires, conduits, ducts, lightning rods, electronics and other types of equipment for the transmission,receipt, distribution or offering of such signals; wireless communication towers, antenna support structures,and other structures supporting said equipment and any attachments to those structures including guy wires and anchors, equipment buildings, generators, parking areas, utility services, driveways and roads and other accessory features.

Wireless Communication Facility – Co-Located: A wireless telecommunications facility that includes awireless communication tower or ATS supporting one or more antennas and owned or used by more thanone public or private entity.

Wireless Communication Tower (Tower): A structure designed and constructed specifically to support an antenna array. A tower may be a monopole, self-supporting (lattice) tower, guy-wire support tower andother similar structure, and includes all supporting lines, cables, wires, and braces.

Woody Vegetation: Live trees or woody, non-herbaceous shrubs. [Adopted 5/17/08]

Zoning Board of Appeals or ZBA: Means the Town of North Yarmouth Zoning Board of Appeals.

Zoning Map: Means the Town of North Yarmouth Zoning Map.